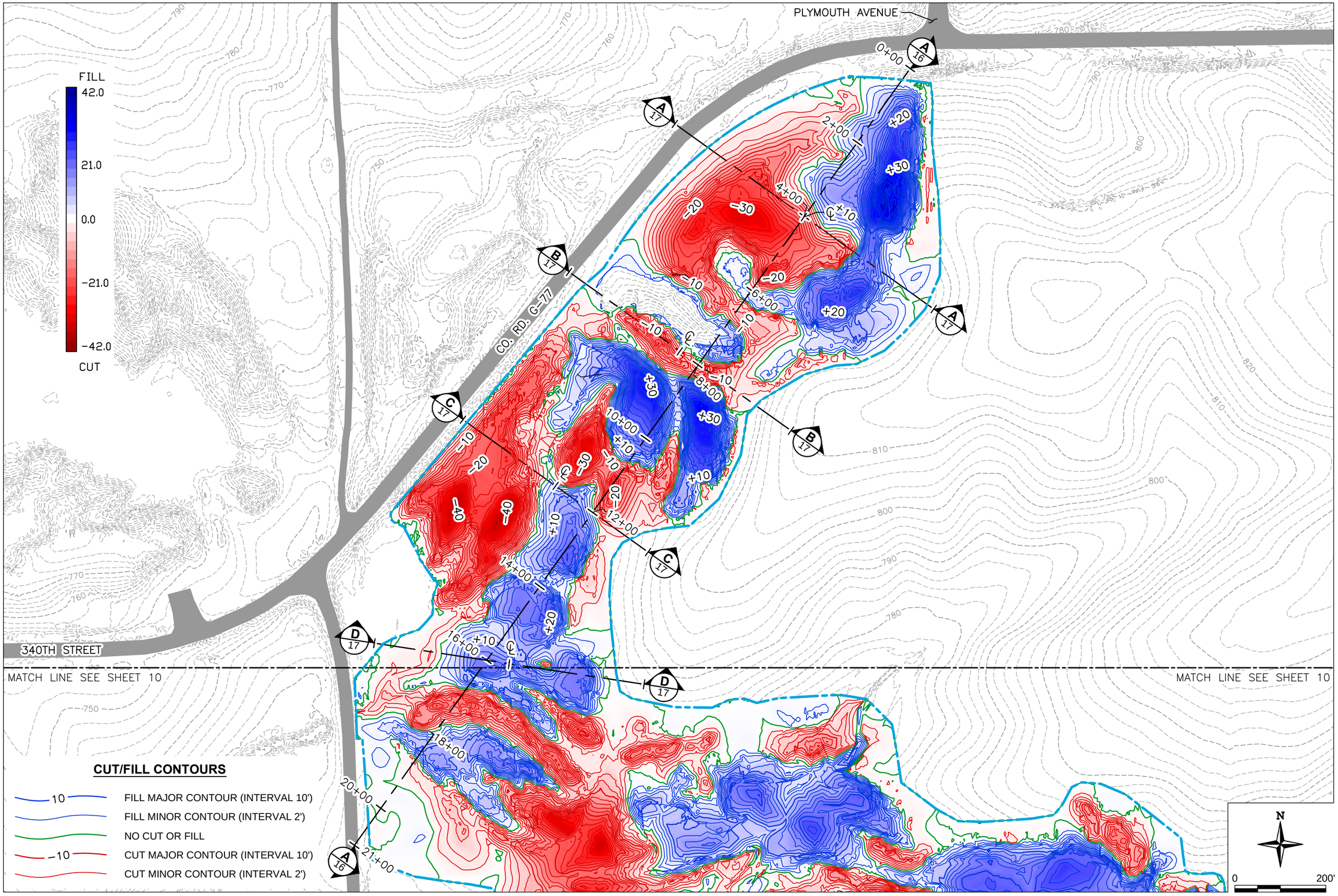

FILE: 21A-VL-NSCUTFILL201408

TRIHYDRO CORPORATION
1252 COMMERCE DRIVE
LARAMIE, WYOMING 82070
www.trihydro.com
(P) 307/745.7474 (F) 307/745.7729

Trihydro

DESIGN BY: DRT | DRAWN BY: PC | CHKD. BY: MD | ISSUED: 7/23/2015 | REVISED:

DIVISION OF SOIL CONSERVATION AND WATER QUALITY
IOWA DEPARTMENT OF AGRICULTURE AND LAND STEWARDSHIP
HENRY A. WALLACE BUILDING
502 E. 9th STREET, DES MOINES, IOWA 50319
(515)281-4246

IOWA DEPARTMENT OF AGRICULTURE AND LAND STEWARDSHIP

VANDERBEEK-LANGSTRAAT AML RECLAMATION PROJECT

NORTH GRADING CUT-FILL ISO-MAP

SHEET 9 OF 21

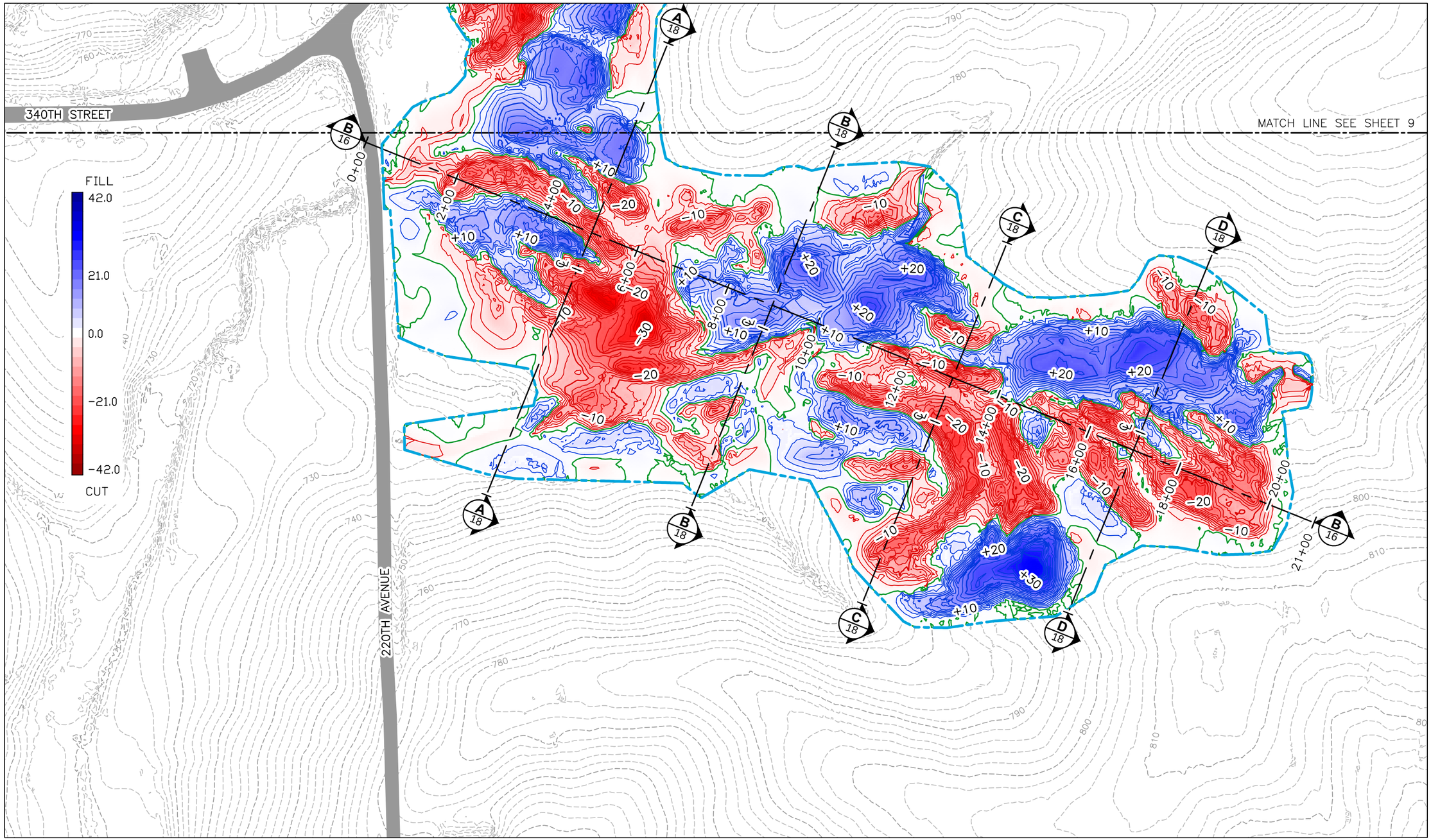

CUT/FILL CONTOURS

- 10 — FILL MAJOR CONTOUR (INTERVAL 10')
- FILL MINOR CONTOUR (INTERVAL 2')
- NO CUT OR FILL
- -10 — CUT MAJOR CONTOUR (INTERVAL 10')
- CUT MINOR CONTOUR (INTERVAL 2')

N

0 200'

FILE: 21A-VL-NSCUTFILL201408

TRIHYDRO CORPORATION
1252 COMMERCE DRIVE
LARAMIE, WYOMING 82070
www.trihydro.com
(P) 307/745.7474 (F) 307/745.7729

Trihydro

DESIGN BY: DRT | DRAWN BY: PC | CHKD. BY: MD | ISSUED: 7/23/2015 | REVISED:

DIVISION OF SOIL CONSERVATION AND WATER QUALITY
IOWA DEPARTMENT OF AGRICULTURE AND LAND STEWARDSHIP
HENRY A. WALLACE BUILDING
502 E. 9th STREET, DES MOINES, IOWA 50319
(515)281-4246

IOWA DEPARTMENT OF AGRICULTURE AND LAND STEWARDSHIP

VANDERBEEK-LANGSTRAAT AML RECLAMATION PROJECT

SOUTH GRADING CUT-FILL ISO-MAP

SHEET 10 OF 21

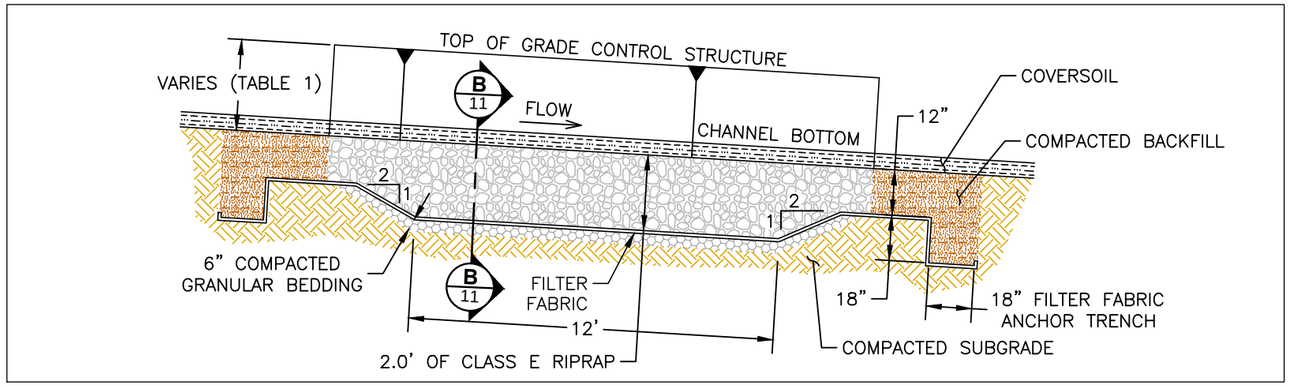

A **TYPICAL GRADE CONTROL STRUCTURE PROFILE**
SCALE: NONE

NOTES:

1. THE DEPTH OF COVERSOIL (TREATED ONSITE MATERIAL) WILL BE DETERMINED IN THE FIELD BASED ON FIELD CONDITIONS.
2. FILTER FABRIC SHALL CONSIST OF AN EIGHT (8) OUNCE WOVEN GEOTEXTILE ACCEPTABLE TO THE ENGINEER.
3. GRANULAR BEDDING SHALL CONSIST OF A CLEAN AGGREGATE THAT CONFORMS TO GRADATION NO. 3 OF THE IOWA DEPARTMENT OF TRANSPORTATION SPECIFICATIONS.
4. GRADE CONTROL STRUCTURES LEFT AND RIGHT SIDE SLOPES ARE RELATIVE TO AN OBSERVER LOOKING DOWNSTREAM.

TABLE 1 . GRADE CONTROL STRUCTURE DIMENSIONS

STRUCTURE NO.	LEFT SIDE SLOPE* (H:V)	RIGHT SIDE SLOPE* (H:V)	DEPTH (FT.)
1	5:1	5	1
2	4:1	3.7	2
3	5:1	5	1
4	6:1	6.6	1.5
5	2.3:1	5	3

* LEFT AND RIGHT SIDES RELATIVE TO AN OBSERVER LOOKING DOWNSTREAM.

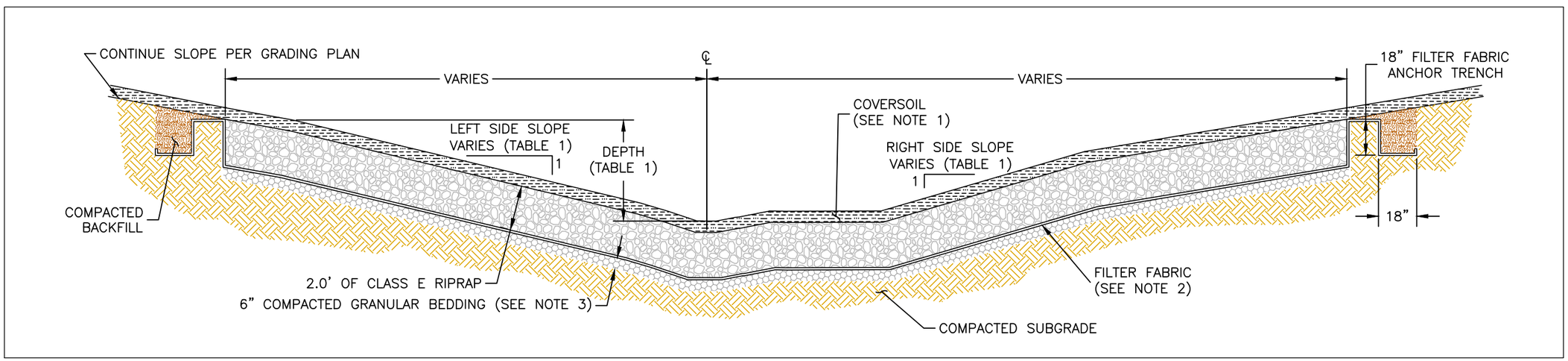

B **TYPICAL GRADE CONTROL STRUCTURE CROSS SECTION**
SCALE: NONE

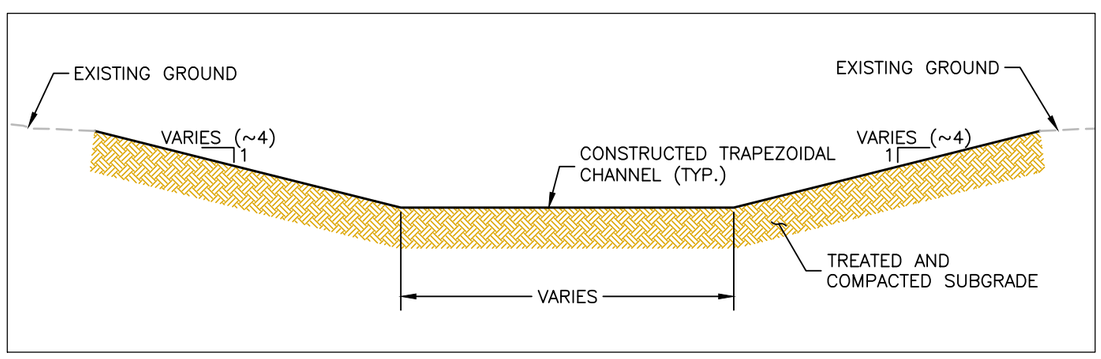

C **TYPICAL MAIN CHANNEL N1 CROSS SECTION**
SCALE: NONE

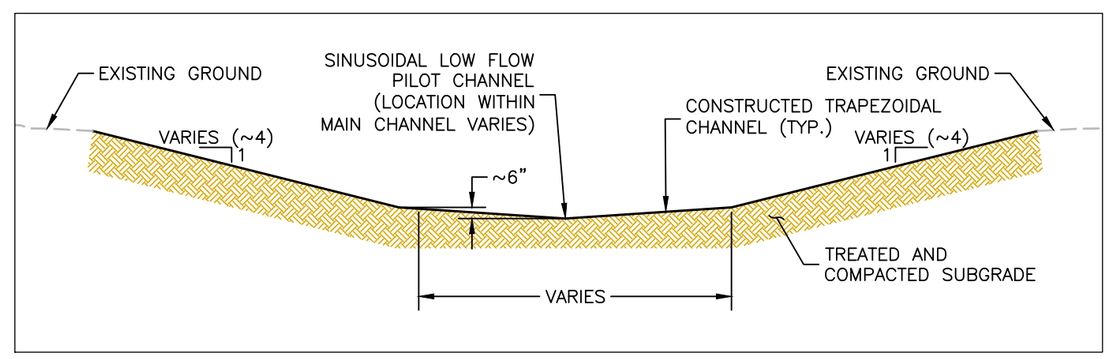

D **TYPICAL MAIN CHANNEL S1 CROSS SECTION**
SCALE: NONE

TRIHYDRO CORPORATION
1252 COMMERCE DRIVE
LARAMIE, WYOMING 82070
www.trihydro.com
(P) 307/745.7474 (F) 307/745.7729

FILE: 21A-VLDETAILS1-201304

REVISED:

ISSUED: 7/23/2015

CHKD. BY: MD

DRAWN BY: PC

DESIGN BY: DRT

DIVISION OF SOIL CONSERVATION AND WATER QUALITY
IOWA DEPARTMENT OF AGRICULTURE AND LAND STEWARDSHIP
HENRY A. WALLACE BUILDING
502 E. 9th STREET, DES MOINES, IOWA 50319
(515)281-4246

VANDERBEEK-LANGSTRAAT AML RECLAMATION PROJECT

GRADE CONTROL AND TEMPORARY CHANNEL CROSSING DETAILS

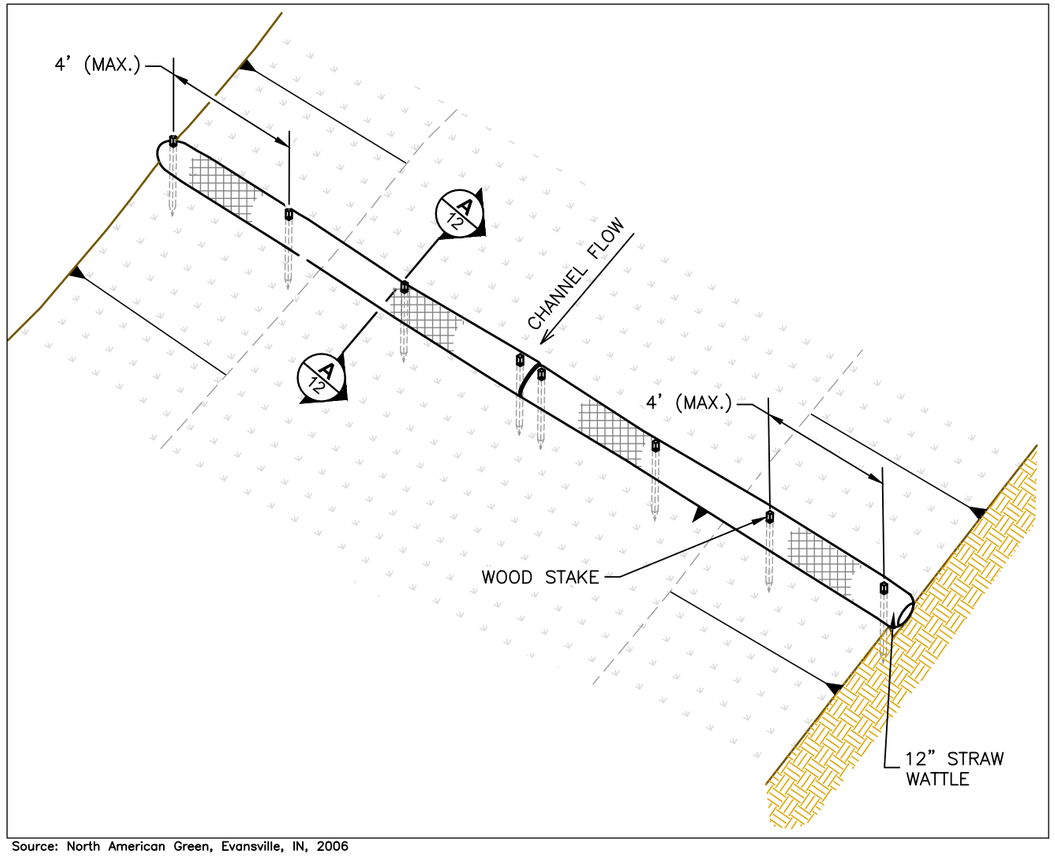

Source: North American Green, Evansville, IN, 2006

1 STRAW WATTLE DETAILS
SCALE: NONE

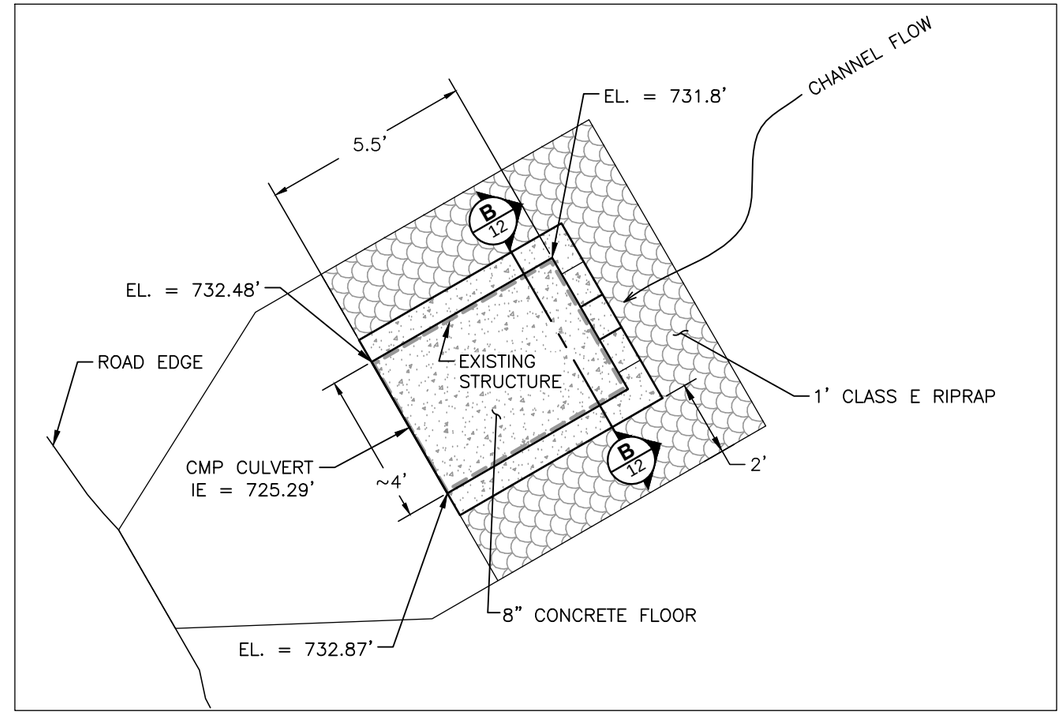

2 CONCRETE WEIR STRUCTURE PLAN VIEW
SCALE: NONE

NOTES:

1. STRAW WATTLE DETAILS SHOWN FOR PLANNING PURPOSES. INSTALLATION AND STAKING SHALL BE IN ACCORDANCE WITH MANUFACTURER RECOMMENDATIONS.
2. ALL EROSION CONTROL FEATURES TO BE STAKED IN THE FIELD BY THE CONTRACTOR AND VERIFIED BY THE ENGINEER.
3. TEMPORARY DIVERSION MAY BE REQUIRED DURING CONSTRUCTION. IF DIVERSION CROSSES THE ROAD, TRAFFIC MUST BE MAINTAINED DURING CONSTRUCTION.
4. CONCRETE MUST BE ACID RESISTANT. USE DYNASTONE® HIGH DENSITY, ACID-RESISTANT READY MIX CONCRETE OR APPROVED EQUAL.

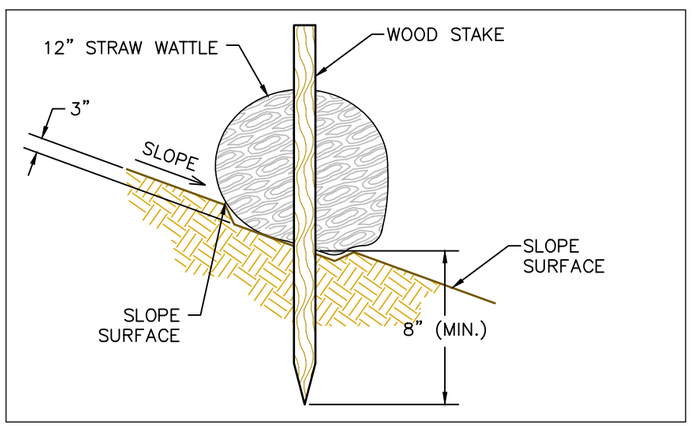

Source: North American Green, Evansville, IN, 2006

A STAKE DETAILS (ON BARE SOIL)
SCALE: NONE

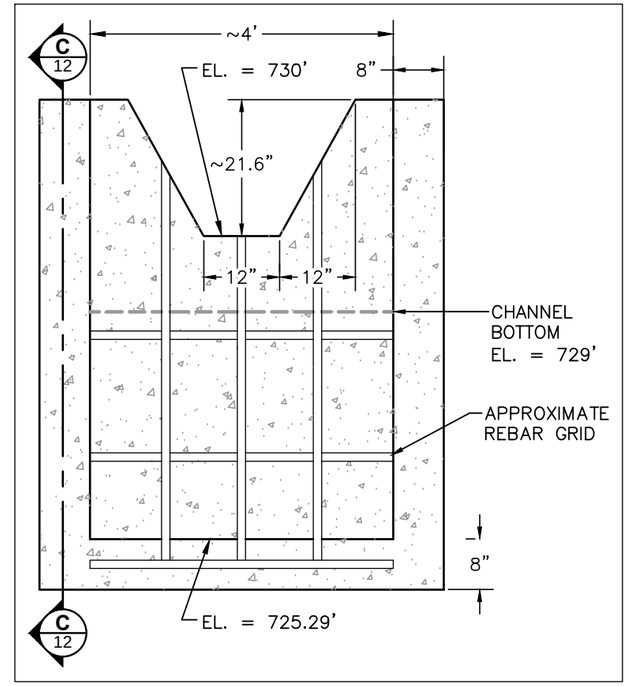

B CONCRETE WEIR STRUCTURE CROSS SECTION
SCALE: NONE

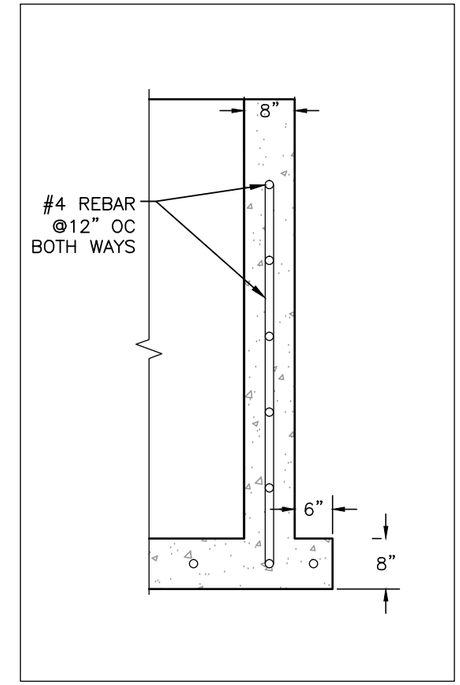

C STRUCTURE CROSS SECTION
SCALE: NONE

TRIHYDRO CORPORATION
1252 COMMERCE DRIVE
LARAMIE, WYOMING 82070
www.trihydro.com
(P) 307/745.7474 (F) 307/745.7729

FILE: 21A-VLDETAILS3-201304

DESIGN BY: DRT | DRAWN BY: PC | CHKD. BY: MD | ISSUED: 7/23/2015 | REVISED:

DIVISION OF SOIL CONSERVATION AND WATER QUALITY
IOWA DEPARTMENT OF AGRICULTURE AND LAND STEWARDSHIP
HENRY A. WALLACE BUILDING
502 E. 9th STREET, DES MOINES, IOWA 50319
(515)281-4246

VANDERBEEK-LANGSTRAAT AML RECLAMATION PROJECT

STRAW WATTLE AND CONCRETE WEIR STRUCTURE DETAILS