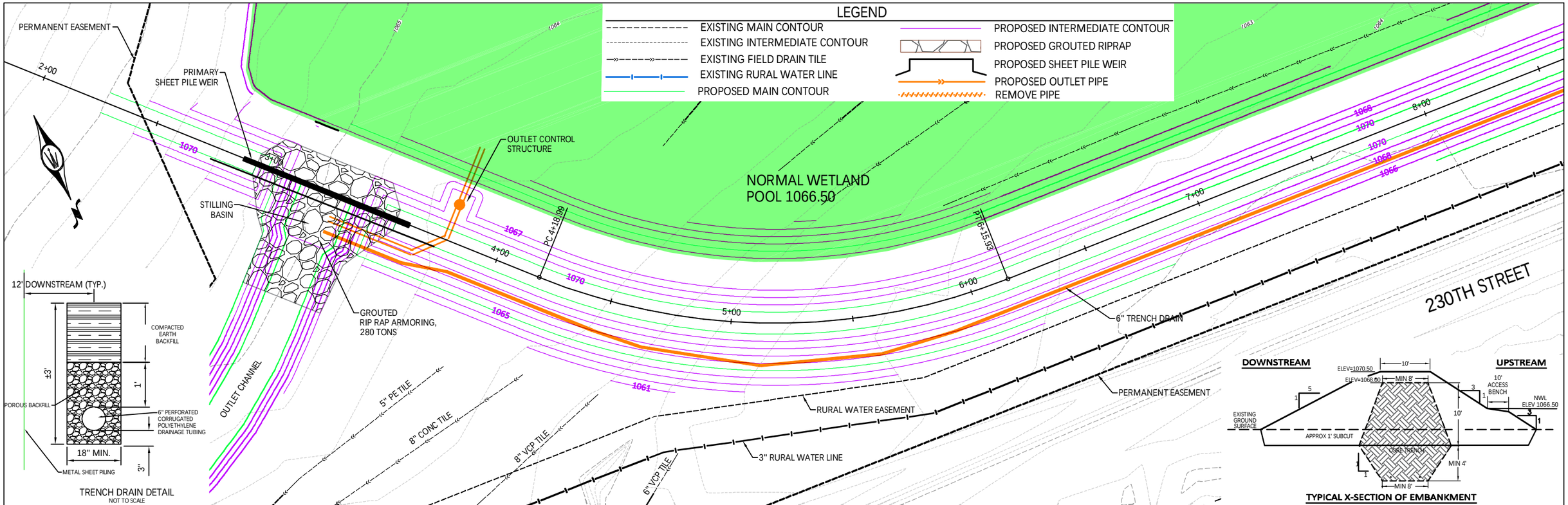

CONSTRUCTION NOTES:

1. PLACE NONWOVEN GEOTEXTILE FABRIC UNDER ALL RIPRAP
2. RIPRAP SHALL BE 18" DEEP UNLESS OTHERWISE NOTED OR APPROVED BY ENGINEER
3. TOP OF RIPRAP UPSTREAM OF WEIR SHALL BE A MINIMUM OF 0.2' BELOW TOP OF WEIR
4. 4' OF RIPRAP UPSTREAM OF WEIR SHALL BE GROUTED TO A SMOOTH TROWEL FINISH
5. THE CONTRACTOR SHALL PROVIDE A MINIMUM ALLOWABLE SETTLEMENT OF 5% OF THE TOTAL FILL DEPTH ON THE BERM

CORE TRENCH NOTES:

1. SUITABLE MATERIAL FOR EMBANKMENT CONSTRUCTION SHALL BE OBTAINED FROM THE SPILLWAY EXCAVATIONS AND DESIGNATED BORROW AREAS.
2. STRIP ALL ORGANICS AND TOPSOIL BENEATH EMBANKMENT.
3. EXCAVATE MINIMUM OF 5 FT DEPTH CORE TRENCH (SEE DETAIL) OR UNTIL SUITABLE MATERIAL IS REACHED.
4. CONSTRUCT CORE TRENCH ALONG APPROXIMATE CENTERLINE OF FILL.
5. EXTEND CORE INTO AND UP SIDES SLOPES TO 1.5' ABOVE NORMAL POOL ELEVATION.
6. SIDES SLOPES SHALL NOT BE STEEPER THAN 1:1.
7. FILL SHALL BE PLACED IN MAXIMUM 9" LIFTS PRIOR TO COMPACTION.
8. BACKFILL WITH LOW IMPERMIABILITY MATERIAL FROM THE PRIMARY BORROW AREA.
9. THE MAXIMUM THICKNESS OF EACH LAYER OF FILL BEFORE COMPACTION SHALL BE AS SPECIFIED. THE ENTIRE SURFACE LAYER OF FILL SHALL BE COMPACTED BY AT LEAST 2 PASSES OF THE COMPACTION EQUIPMENT.

HORZ. 0 20 40 SCALE FEET
VERT. 0 5 10 SCALE FEET

© Bolton & Menk, Inc. 2016, All Rights Reserved
H:\IDALS\A11107548\C3D\JGSSheets\109548_BRM1.dwg 10/7/2016 12:16 PM

BOLTON & MENK
2730 FORD ST, P.O. BOX 668
AMES, IOWA 50010
Phone: (515) 233-6100
Email: Ames@bolton-menk.com
www.bolton-menk.com

REV	ISSUED FOR	DATE
0	BID	6/9/16
1	FINAL	10/6/16

DESIGNED JPR
DRAWN JGS
CHECKED JDL

IOWA DEPARTMENT OF AGRICULTURE
GRUNDY COUNTY CREP PROJECT NO. GRU871810B
DIKE PROFILE

4.0

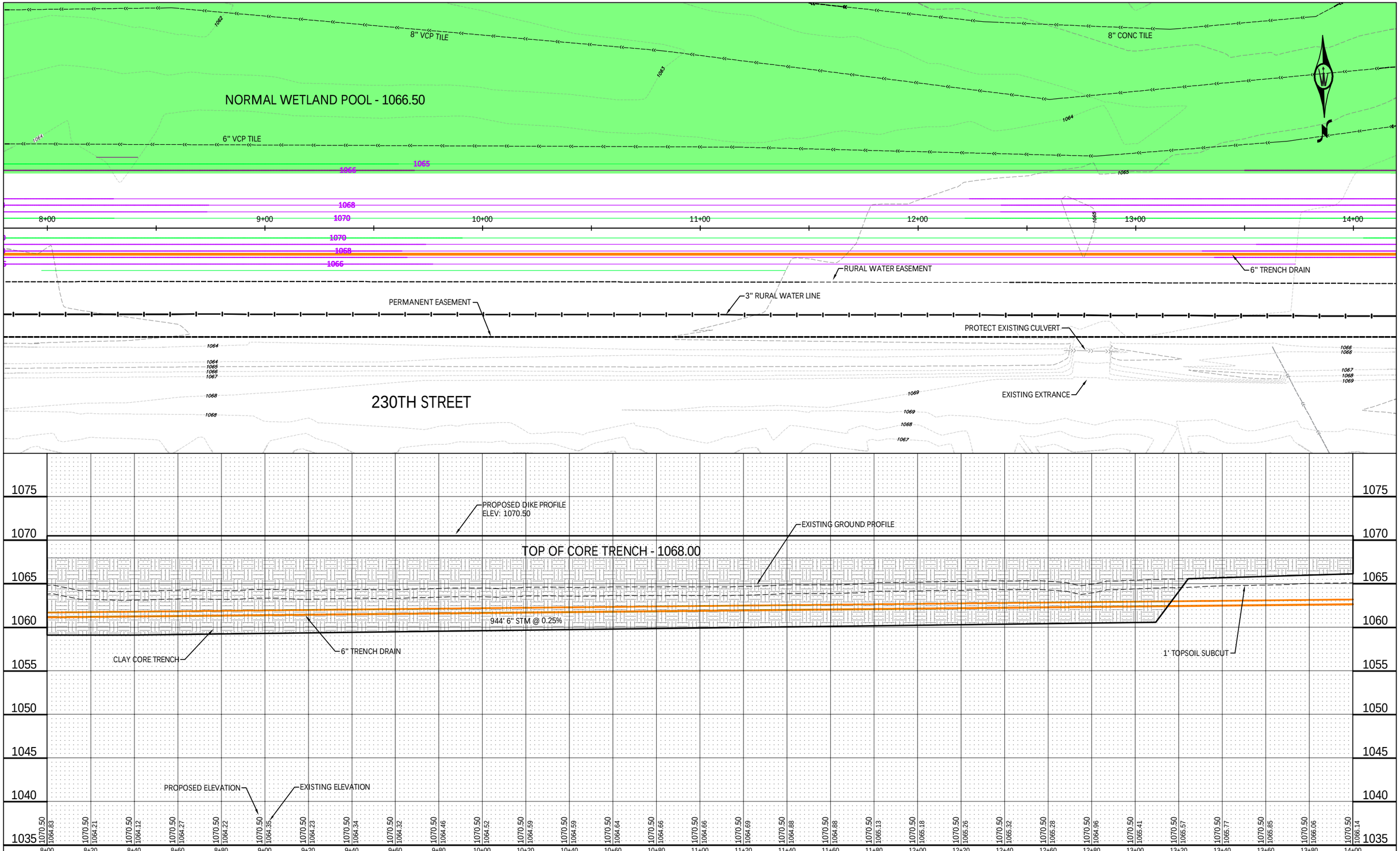

HORZ. 0 20 40 SCALE FEET

VERT. 0 5 10 SCALE FEET

© Bolton & Menk, Inc. 2016, All Rights Reserved
H:\IDALS\A11107548\C3D\JGSSheets\109548_BRM1.dwg 10/7/2016 12:16 PM

BOLTON & MENK

2730 FORD ST, P.O. BOX 668
AMES, IOWA 50010
Phone: (515) 233-6100
Email: Ames@bolton-menk.com
www.bolton-menk.com

REV	ISSUED FOR	DATE
0	BID	6/9/16
1	FINAL	10/6/16

DESIGNED JPR
DRAWN JGS
CHECKED JDL

IOWA DEPARTMENT OF AGRICULTURE
GRUNDY COUNTY CREP PROJECT NO. GRU871810B
DIKE PROFILE

SHEET 4.1

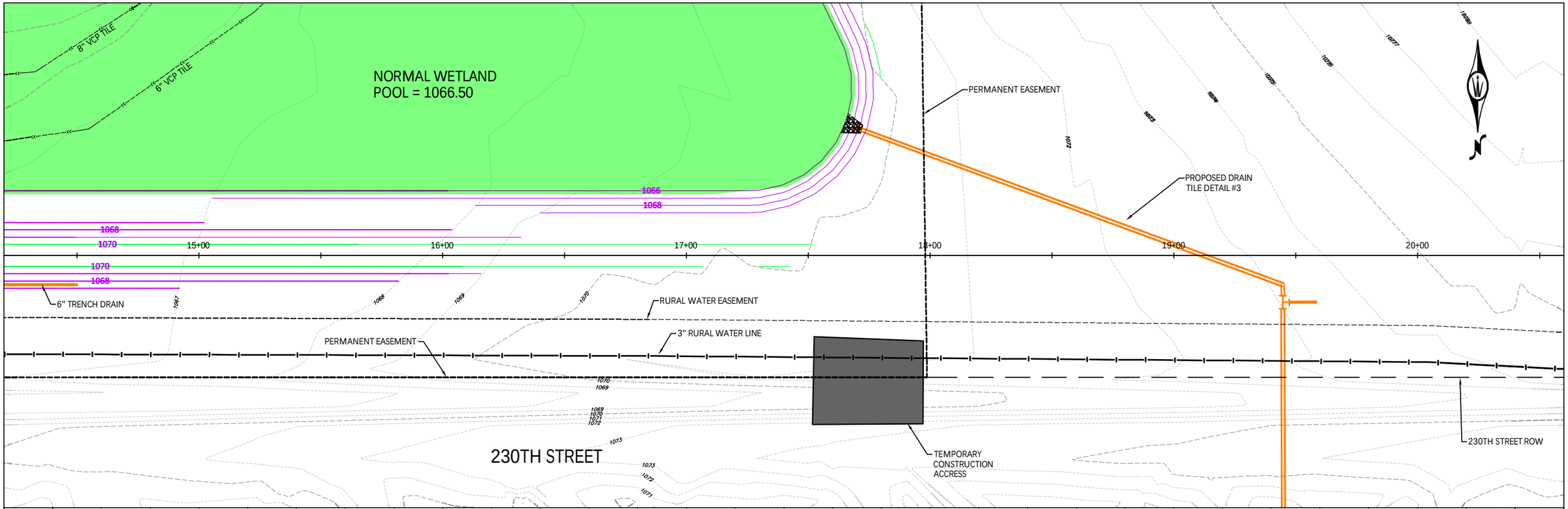

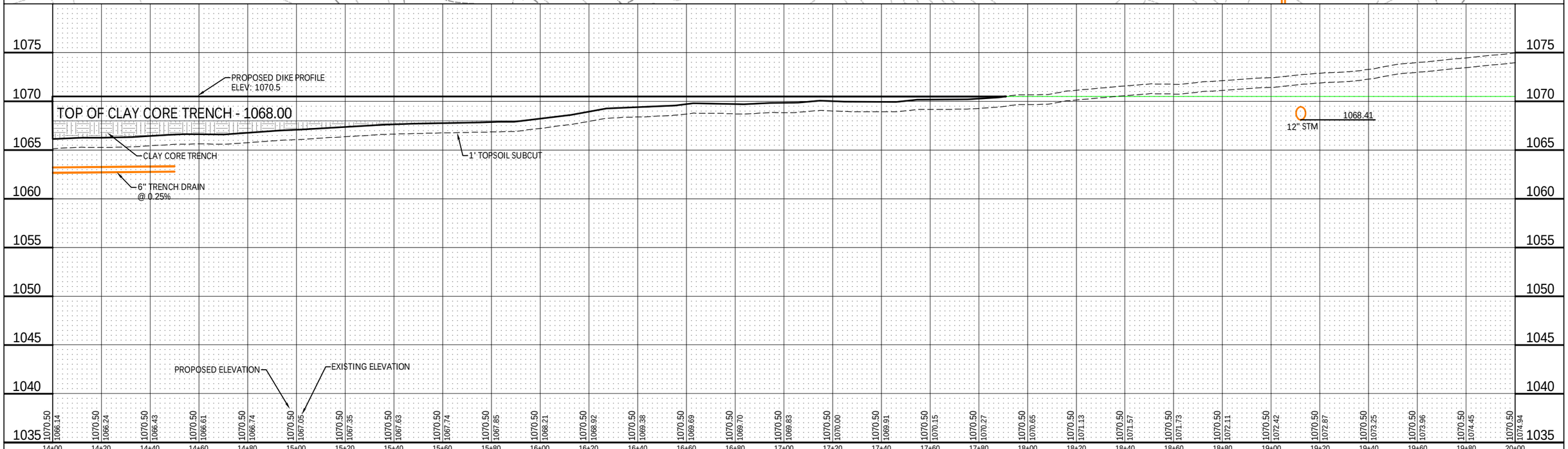

HORZ. 0 20 40 SCALE FEET

VERT. 0 5 10 SCALE FEET

© Bolton & Menk, Inc. 2016, All Rights Reserved
H:\IDALS\A11107548\C3D\JGSSheets\109548_BRM1.dwg 10/7/2016 12:16 PM

BOLTON & MENK

2730 FORD ST, P.O. BOX 668
AMES, IOWA 50010
Phone: (515) 233-6100
Email: Ames@bolton-menk.com
www.bolton-menk.com

REV	ISSUED FOR	DATE
0	BID	6/9/16
1	FINAL	10/6/16

DESIGNED JPR
DRAWN JGS
CHECKED JDL

IOWA DEPARTMENT OF AGRICULTURE
GRUNDY COUNTY CREP PROJECT NO. GRU871810B
DIKE PROFILE

SHEET 4.2

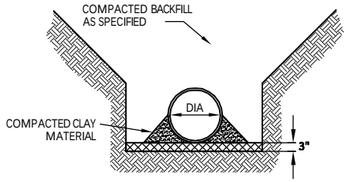

NOTES:
1. BEGIN BACKFILL IMMEDIATELY AFTER PIPE HAS BEEN PLACED

2. EXCAVATE 3" BELOW PIPE GRADE. THEN BACKFILL WITH DAMP FRIABLE SOIL FREE FROM LUMPS AND RAKED OR GRADED TO A TRUE PLANE BEFORE PLACING CMP. NO COMPACTION OF BEDDING IS REQUIRED.

3. USE COMPACTED CLAY MATERIAL FOR PIPE BEDDING UPSTREAM OF PIPE DIAPHRAGM.

4. PIPE BEDDING MATERIAL SHALL BE HAND TAMPED ONLY. POWER TAMPING IS NOT ALLOWED.

CMP PIPE BEDDING FOR WATER CONTROL STRUCTURE

NOT TO SCALE

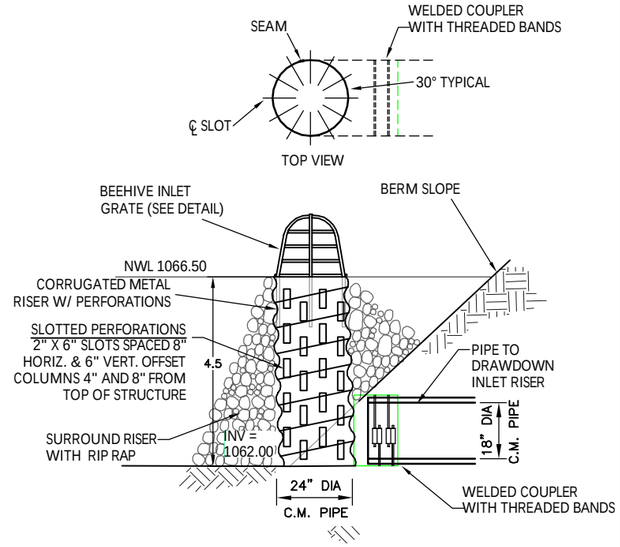

CMP SLOTTED INTAKE RISER

NOT TO SCALE

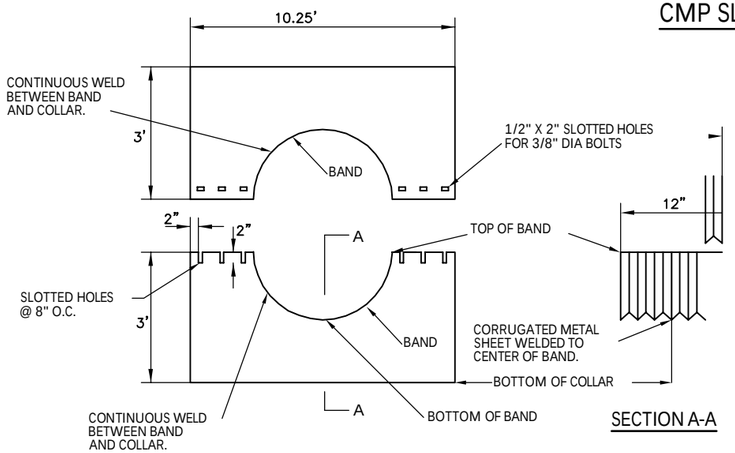

CMP ANTI-SEEP COLLAR

NOT TO SCALE

(SOURCE: SUDAS 9040.17)

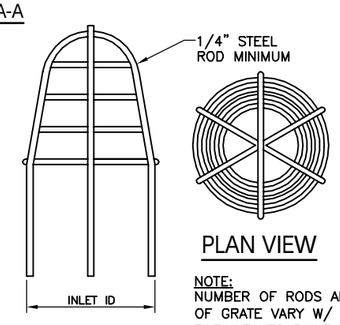

SECTION VIEW

PLAN VIEW

NOTE:
NUMBER OF RODS AND SIZE OF GRATE VARY W/ SIZE OF TILE INTAKES PAINT WITH (2) COATS RUST INHIBITING PAINT FOLLOWING FABRICATION

BEEHIVE INLET GRATE (STEEL BARS)

NOT TO SCALE

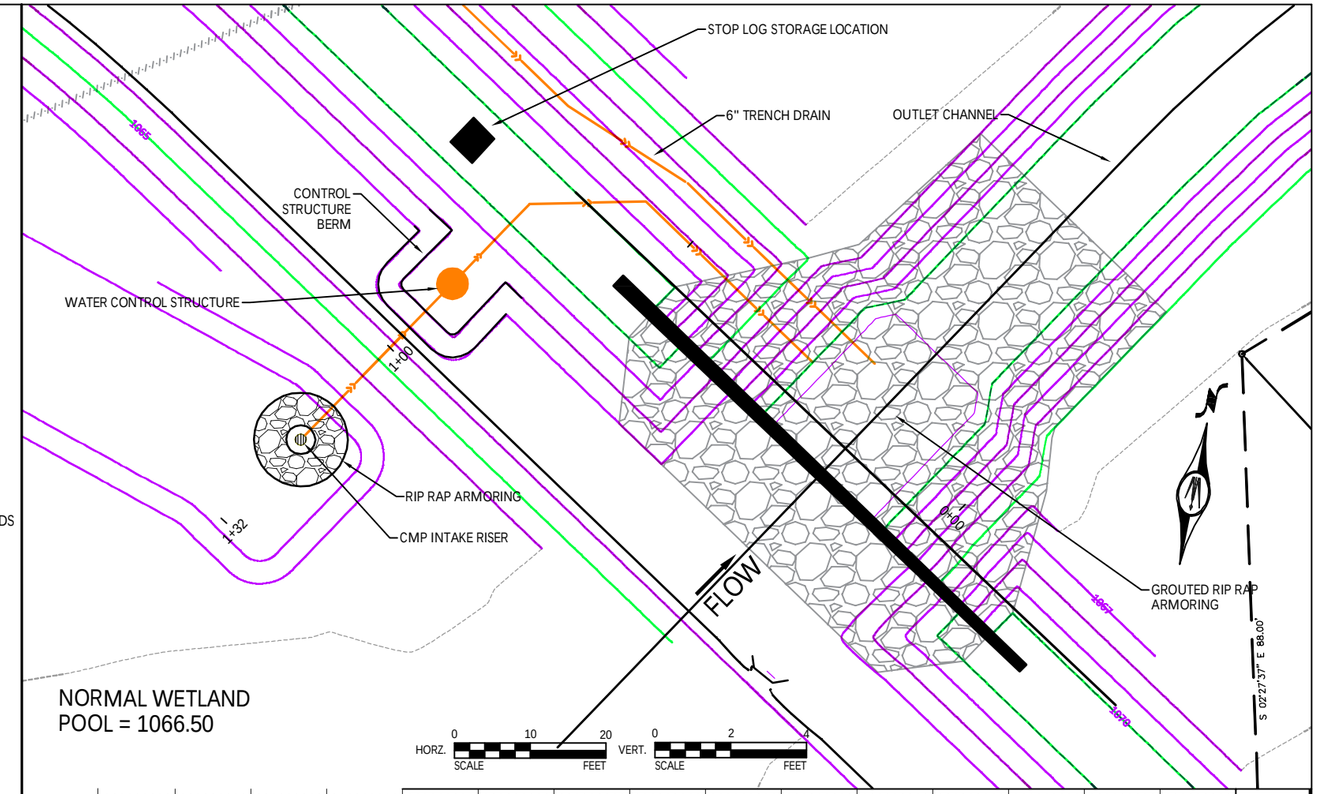

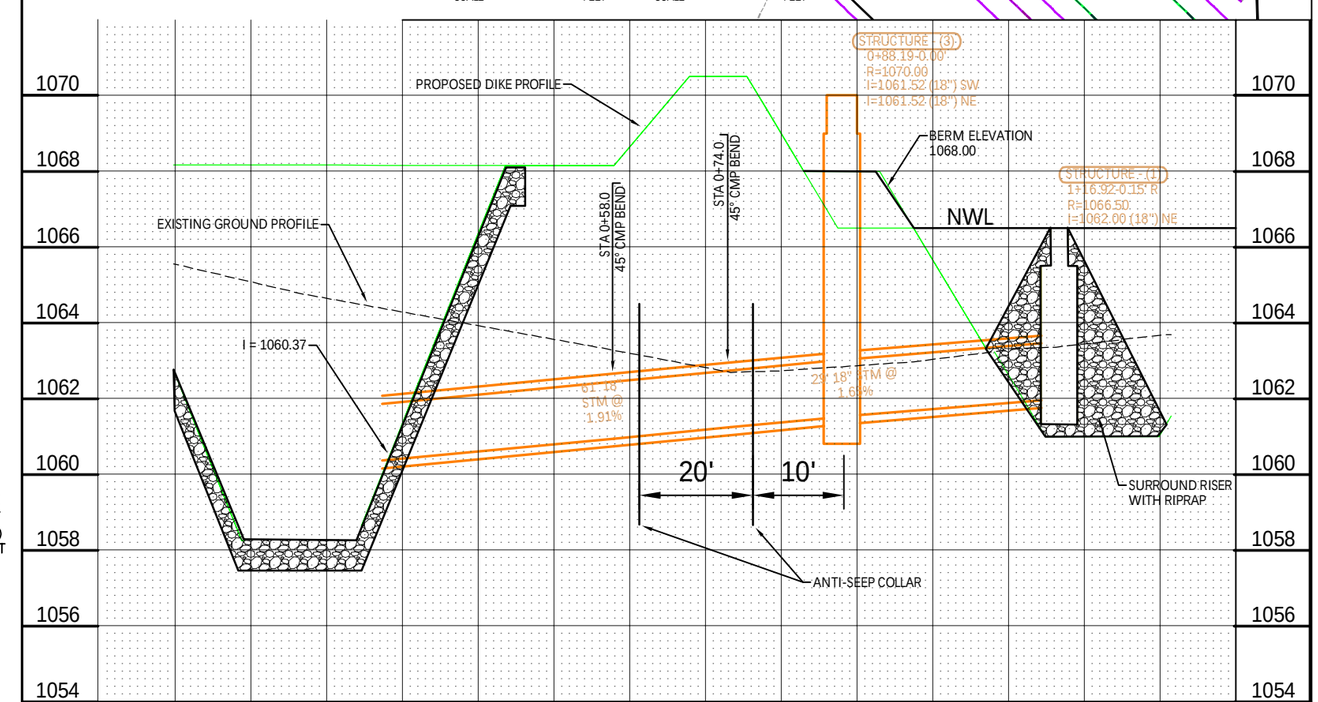

© Bolton & Menk, Inc. 2016, All Rights Reserved
H:\IDALS\A11107548\C3D\JGSSheets\109548_BSN1.dwg 10/7/2016 3:26 PM

BOLTON & MENK
2730 FORD ST, P.O. BOX 668
AMES, IOWA 50010
Phone: (515) 233-6100
Email: Ames@bolton-menk.com
www.bolton-menk.com

REV	ISSUED FOR	DATE
0	BID	6/9/16
1	FINAL	10/6/16

DESIGNED JPR
DRAWN JGS
CHECKED JDL

IOWA DEPARTMENT OF AGRICULTURE
GRUNDY COUNTY CREP PROJECT NO. GRU871810B
WATER CONTROL STRUCTURE & OUTLET PIPE