KOSSUTH COUNTY CREP WETLAND PROJECT
SITE KOS952703D
KOSSUTH COUNTY, IOWA

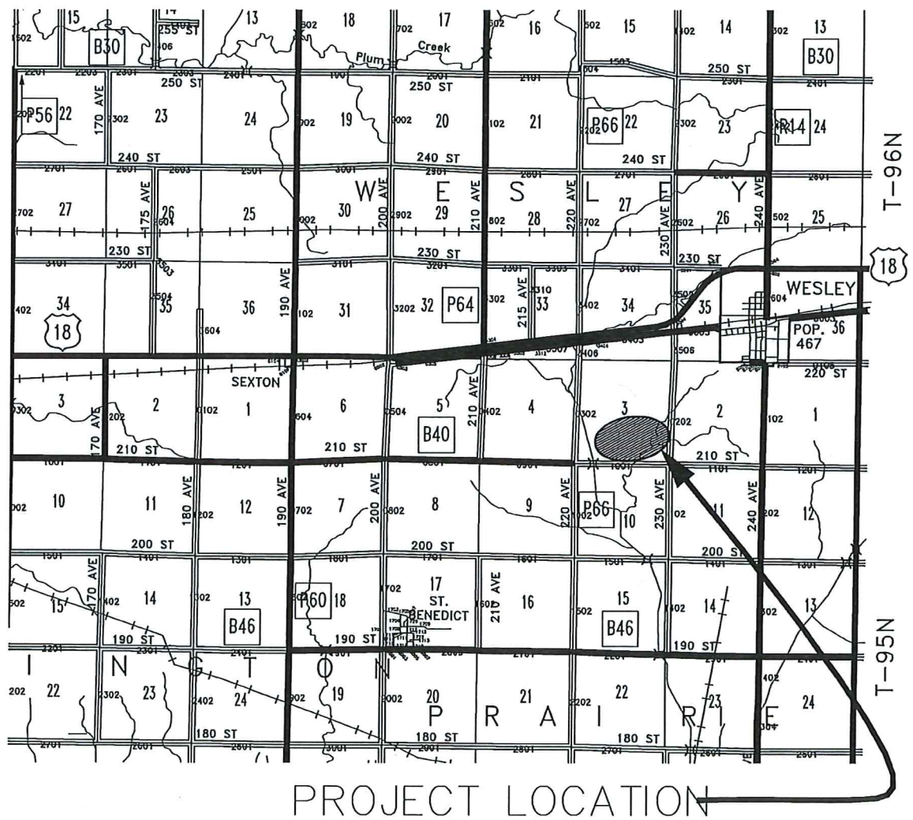

PROJECT LOCATION

0 0.25 0.5 1.0
SCALE IN MILES

NORTH

SITE LOCATION MAP

SECTION 3, T-95-N, R-27-W
KOSSUTH COUNTY, IOWA

PREPARED FOR:

IOWA DEPARTMENT OF AGRICULTURE AND LAND STEWARDSHIP
HENRY A. WALLACE BUILDING
DES MOINES, IOWA 50319

SHEET INDEX

C.01	TITLE SHEET
C.02, C.03	SITE PLANS
C.04	STRUCTURE PLAN
C.05	SHEET PILE STRUCTURE
C.06, C.07	DETAILS

HORIZONTAL CONTROL

SEE INDIVIDUAL SHEETS

VERTICAL CONTROL

THE ELEVATIONS ON THIS PLAN ARE BASED ON THE NORTH AMERICAN VERTICAL DATUM OF 1988 (NAVD).

CIVIL ENGINEERS / SURVEYORS

SEH
215 NORTH ADAMS
MASON CITY, IOWA 50401
PHONE NO. (641) 424-6344
FAX NO. (641) 424-0351

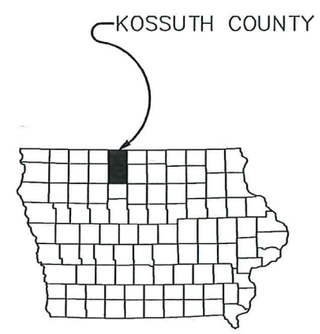

TYPICAL HATCH PATTERNS

- GROUTED RIP RAP
- POOL EXCAVATION
- DEEP WATER AREA
- BORROW AREA
- PERMANENT POOL AREA
- EXISTING FIELD TILE
- PROPOSED FIELD TILE
- HMA ROAD EDGE
- GRAVEL ROAD EDGE
- HMA — HMA SURFACE
- GR. — GRAVEL SURFACE

LICENSED PROFESSIONAL ENGINEER
ROBERT G. LARGET
14021
IOWA

I hereby certify that this engineering document was prepared by me or under my direct personal supervision and that I am a duly licensed Professional Engineer under the laws of the State of Iowa.

Robert G. Larget 9/28/16
Robert G. Larget — Date
License number 14021
My License renewal date is December 31, 2016

Pages or sheets covered by this seal: All sheets

SEH
215 NORTH ADAMS AVENUE
MASON CITY, IOWA 50401
PHONE: 641-424-6344
www.sehinc.com

KOSSUTH COUNTY CREP
WETLAND PROJECT
SITE KOS952703D
KOSSUTH COUNTY, IOWA

MARK	DATE	DESCRIPTION
		REVISIONS

SEH FILE NO. 132936 - IODAG
CITY PROJECT NO. -----
ISSUE DATE 2015
DESIGNED BY R.L.
DRAWN BY dk-
Short Elliott Hendrickson, Inc. © (SEH)

SHEET TITLE
TITLE SHEET

SHEET
C.01

CONSTRUCTION NOTES:

1. REMOVE ALL TILE UNDER EMBANKMENT FROM 15' UPSTREAM TO 15' DOWNSTREAM OF THE EMBANKMENT FOOTPRINT. PERFORM EXPLORATORY EXCAVATION WITHIN CORE EXCAVATION.
2. SPREAD 6" OF TOPSOIL ON TOP OF ENTIRE DIKE AND FILL AREAS WITHIN POOL.
3. STRIP AND SALVAGE 6" OF TOPSOIL FROM BORROW AREAS. AFTER BORROW OPERATIONS ARE COMPLETED SPREAD TOPSOIL UNIFORMLY OVER THE BORROW AREA (INCLUDING AREAS BELOW THE WETLAND CREST).
4. ALL WORK SHALL BE PERFORMED IN ACCORDANCE WITH STATE AND LOCAL REGULATIONS, CODES, AND O.S.H.A. STANDARDS.
5. CONTRACTOR SHALL CONTACT IOWA ONE CALL @ 1-800-292-8989 FOR LOCATION OF ALL UTILITIES, AT LEAST 48 HOURS PRIOR TO BEGINNING CONSTRUCTION AS REQUIRED BY STATE LAW.
6. BORROW AREA EXCAVATION NO DEEPER THAN ELEVATION 1206.0 – FINISH SLOPES NOT TO EXCEED 3:1.
7. STRIPPED AND REMOVED UNSUITABLE MATERIALS, IF ANY, ARE TO BE DISPOSED OF IN BORROW AREA AFTER COMPLETION OF BORROW OPERATION AND PRIOR TO TOPSOIL PLACEMENT.

GENERAL NOTES:

DRAINAGE AREA	1775 ACRES
PERMANENT POOL ELEVATION	1209.0 FEET
PERMANENT POOL AREA	13.43 ACRES
DEEP WATER AREA	2.30 ACRES
TOP OF BERM ELEVATION	1214.0 FEET
100 YR EVENT ELEVATION	1212.85 FEET
EASEMENT AREA	46.10 ACRES
PERCENT OF POOL TO DRAINAGE AREA	0.76%
PERCENT DEEP WATER	17.13%
BUFFER RATIO	2.43
APPROXIMATE DIKE LENGTH	725'
APPROXIMATE STRUCTURAL FILL REQUIRED	8,432 CU. YD.
APPROXIMATE NON-STRUCTURAL FILL	6,041 CU. YD.

PROPERTY OWNERS:
GARY ERPELDING
MARK KLEIN

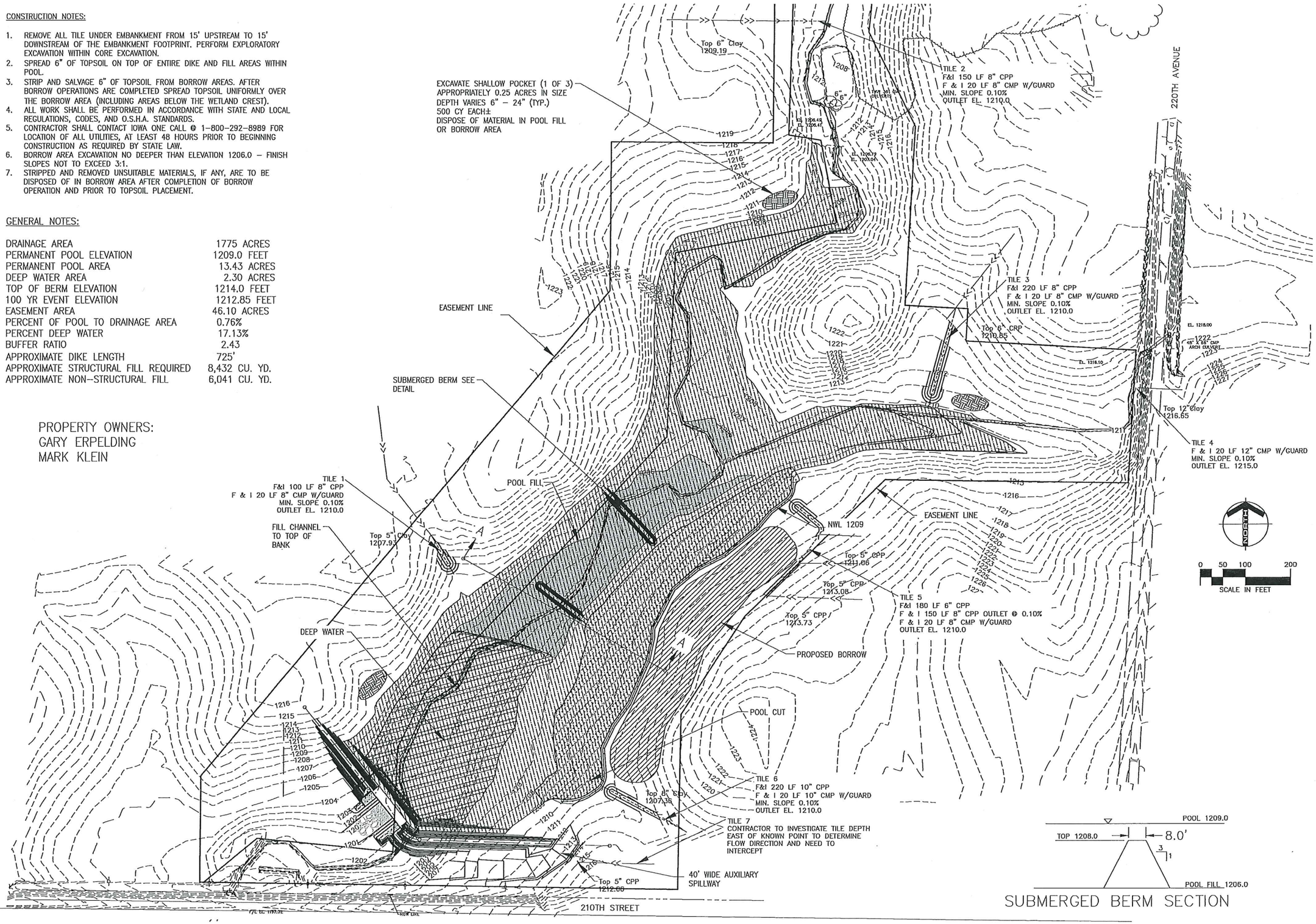

SUBMERGED BERM SECTION

215 NORTH ADAMS AVENUE
MASON CITY, IOWA 50401
PHONE 641.424.5041
www.sehinc.com
SEH

KOSSUTH COUNTY CREP
WETLAND PROJECT
SITE KOS952703D
KOSSUTH COUNTY, IOWA

MARK	DATE	DESCRIPTION
		REVISIONS

SEH FILE NO. 132936 – IODAG
CITY PROJECT NO. ----
ISSUE DATE 2015
DESIGNED BY R.L.
DRAWN BY dk–
Short Elliott Hendrickson, Inc. © (SEH)

SHEET TITLE
SITE PLAN

SHEET
C.02

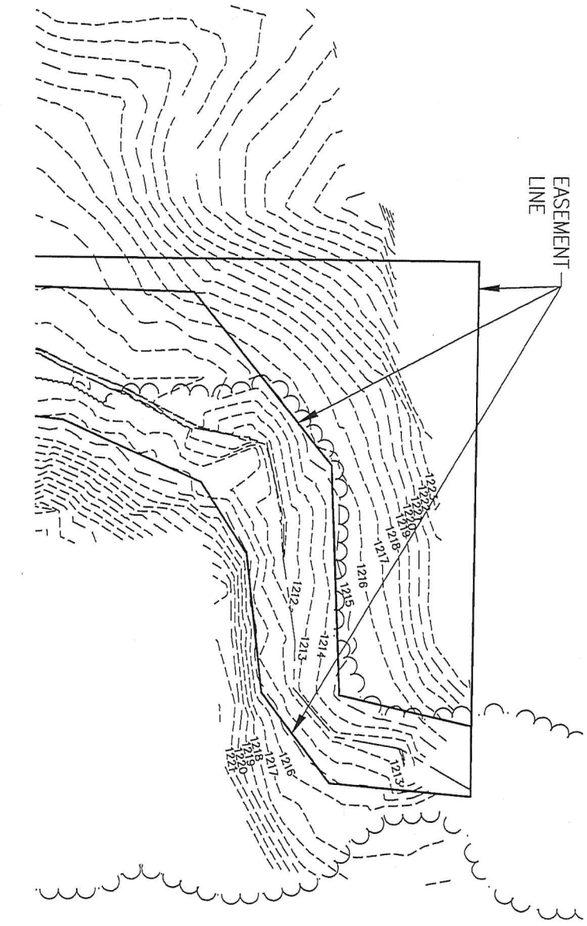

SHEET C.03	SHEET TITLE SITE PLAN	SEH FILE NO. 132936 – IODAG CITY PROJECT NO. ---- ISSUE DATE 2015 DESIGNED BY R.L. DRAWN BY dk– Short Elliott Hendrickson, Inc. © (SEH)	MARK DATE DESCRIPTION REVISIONS	KOSSUTH COUNTY CREP WETLAND PROJECT SITE KOS952703D KOSSUTH COUNTY, IOWA	SEH 215 NORTH ADAMS AVENUE MASON CITY, IOWA 50401 PHONE: 641.424.8344 www.sehinc.com

REFER TO SHEET C.05 FOR RIPRAP CHANEL CROSS-SECTION, DIMENSIONS AND ELEVATIONS

NOTE: FOR WATER TIGHT COUPLING BAND AND TANK LUG DETAILS SEE NRCS STANDARD DETAIL (IA-1220)

WATER CONTROL STRUCTURE
FURNISH AND INSTALL INLINE WATER CONTROL STRUCTURE 48" DIA. X 7.75' H WITH POURED CONCRETE BASE, SEE IA-51 FOR SPECIAL SPECIFICATIONS. INSTALL PER MANUFACTURER RECOMMENDATIONS.

CONSTRUCTION NOTES:

1. PLACE GEOTEXTILE FABRIC UNDER ALL RIP RAP.
2. RIP RAP TO BE 18" DEEP, UNLESS NOTED OTHERWISE.
3. TOP OF RIPRAP UPSTREAM OF WEIR SHALL BE A MINIMUM OF 0.1' BELOW TOP OF WEIR.
4. REMOVE ALL TREES FROM POOL AREA. NOT ALL TREES ARE SHOWN.
5. REMOVE ALL FENCING WITHIN POOL AREA.
6. PLACE MINIMUM OF 3 FEET OF STOP LOGS IN INLINE WATER CONTROL STRUCTURE AT ALL TIMES TO PREVENT FLOTATION.
7. AFTER SEEDING, PLACE 3 FT. OF STOP LOGS IN STRUCTURE.
8. AFTER GROWTH IS ESTABLISHED, PLACE ALL STOP LOGS IN STRUCTURE.

CORE TRENCH NOTES:

1. STRIP 6" VEGETATION BENEATH EMBANKMENT.
2. STRIP 6" TOP SOIL BENEATH EMBANKMENT.
3. EXCAVATE 4 FT CORE TRENCH PER DETAIL.

- CONSTRUCT CORE TRENCH ALONG APPROXIMATE CENTERLINE OF FILL
- EXTEND INTO AND UP SIDE SLOPES TO NORMAL POOL LEVEL
- EXCAVATE MINIMUM OF 5' DEPTH AND/OR UNTIL SUITABLE MATERIAL IS REACHED
- WIDTH – MINIMUM 8' AT BASE
- SIDE SLOPES NOT STEEPER THAN 1:1
- BACK FILL WITH IMPERVIOUS MATERIAL

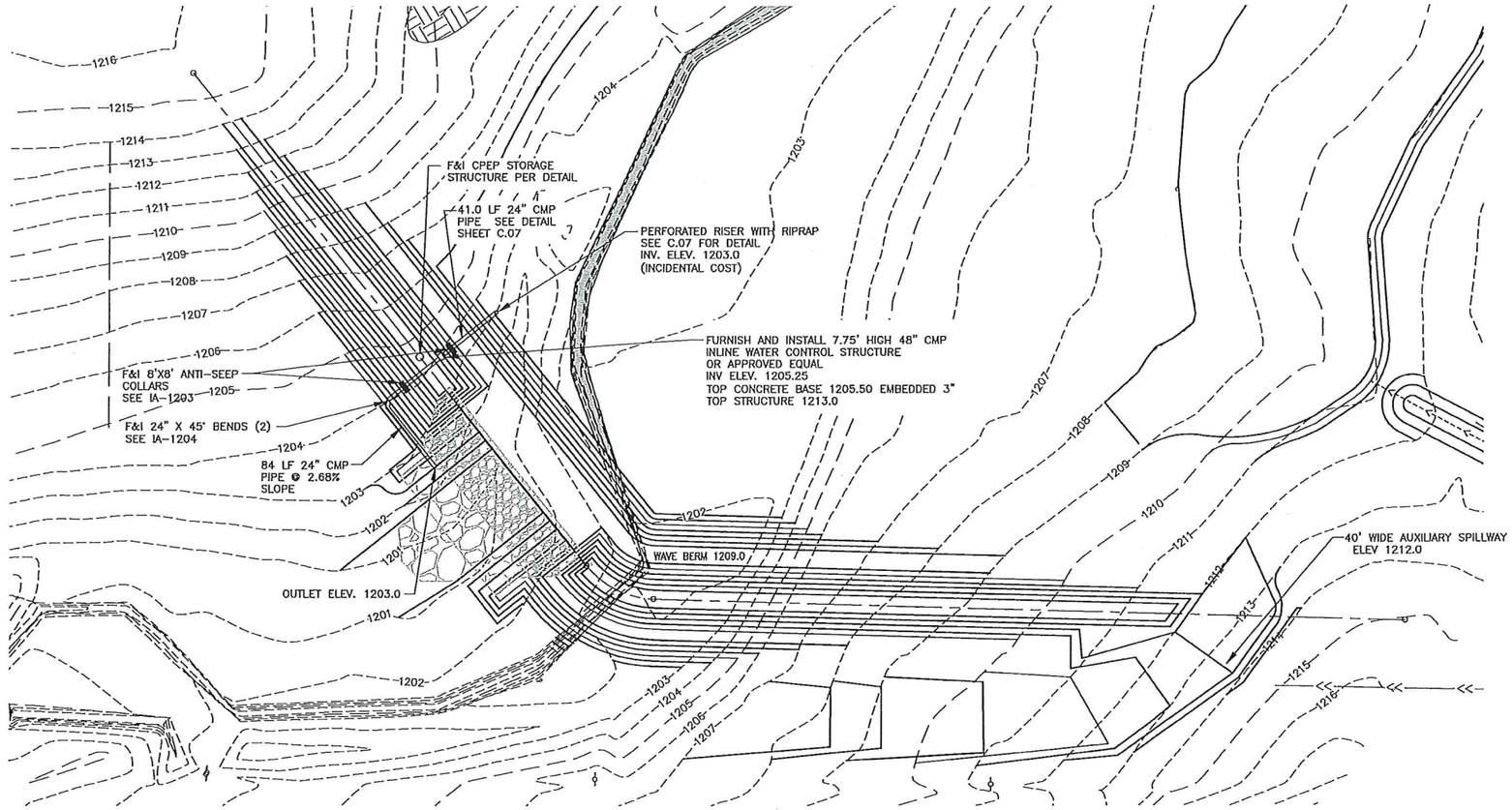

STRUCTURE PLAN

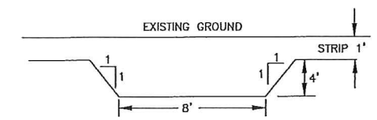

CORE TRENCH DETAIL

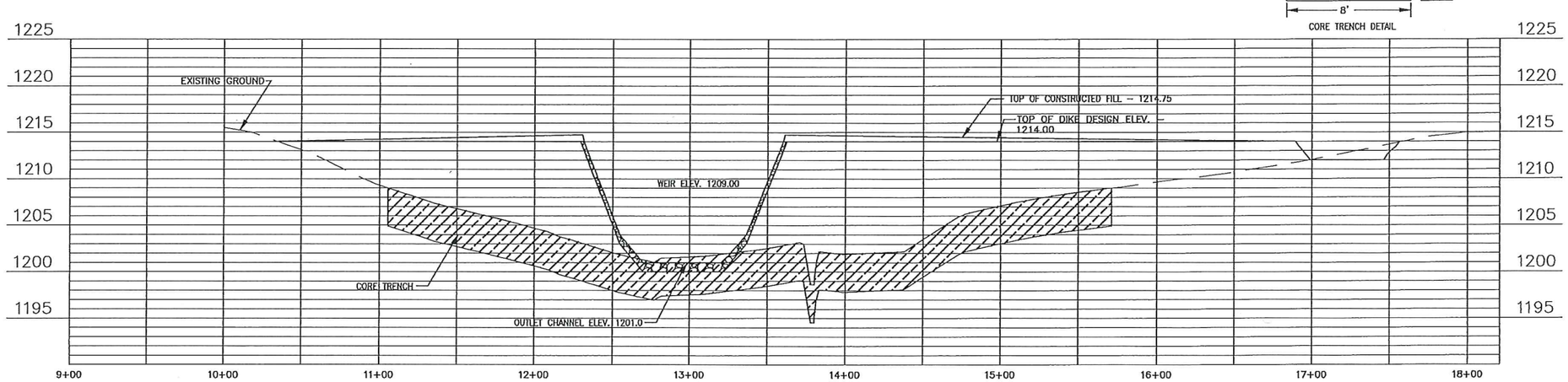

215 NORTH ADAMS AVENUE
MASON CITY, IOWA 50401
PHONE 641.424.5244
www.sehinc.com
SEH

KOSSUTH COUNTY CREP
WETLAND PROJECT
SITE KOS952703D
KOSSUTH COUNTY, IOWA

MARK	DATE	DESCRIPTION
		REVISIONS

SEH FILE NO. 132936 – IODAG
CITY PROJECT NO. ----
ISSUE DATE 2015
DESIGNED BY R.L.
DRAWN BY dk–
Short Elliott Hendrickson, Inc. © (SEH)

SHEET TITLE
STRUCTURE PLAN

SHEET
C.04

SHEET PILE STRUCTURE

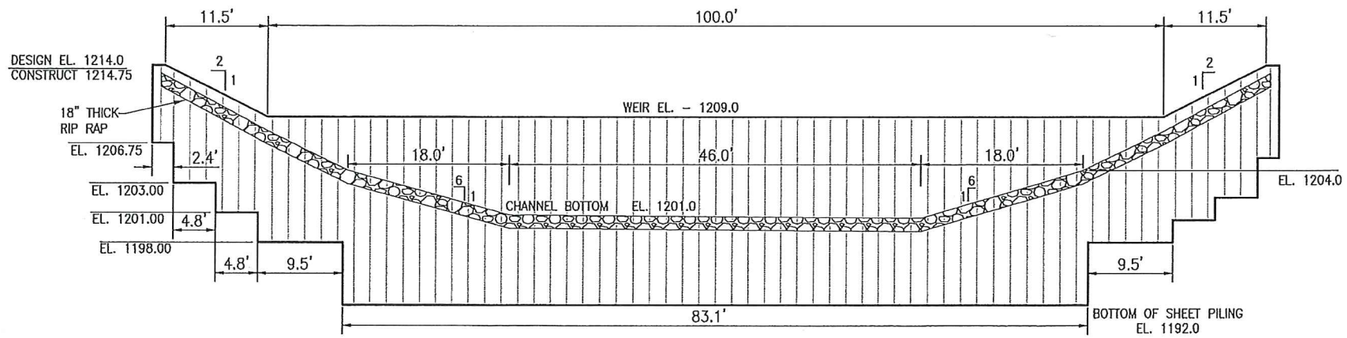

SHEET PILE CROSS-SECTION

N.T.S.

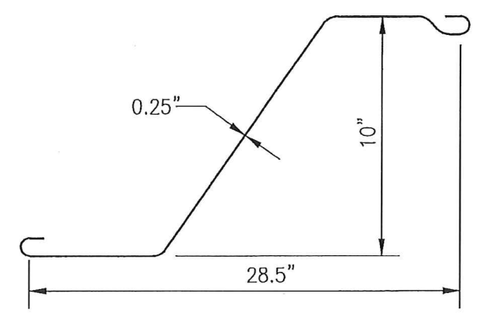

DESIGN NOTES:

1. DESIGN SHEET PILE AREA = 1877 SF
2. SHEET PILE TOE: MINIMUM SECTION MODULUS 14.36 CU. IN. PER FT. OF WALL
   MINIMUM THICKNESS 0.25 IN.
   MINIMUM STEEL GRADE 36 KSI
   MEET ASTM A-328, A-572 OR A-690 MATERIAL SPECIFICATION
   MINIMUM MOMENT OF INERTIA OF 170.57 INCHES **4 PER PILE
3. PILING TO BE INSTALLED STARTING FROM THE CENTER OF THE TOE SECTION.

SEH
215 NORTH ADAMS AVENUE
MASON CITY, IOWA 50401
PHONE: 641.424.6344
www.sehinc.com

KOSSUTH COUNTY CREP
WETLAND PROJECT
SITE KOS952703D
KOSSUTH COUNTY, IOWA

MARK	DATE	DESCRIPTION

REVISIONS

SEH FILE NO. 132936 - IODAG
CITY PROJECT NO. ----
ISSUE DATE 2015
DESIGNED BY R.L.
DRAWN BY dk-
Short Elliott Hendrickson, Inc. © (SEH)

SHEET TITLE
SHEET PILE STRUCTURE

SHEET
C.05

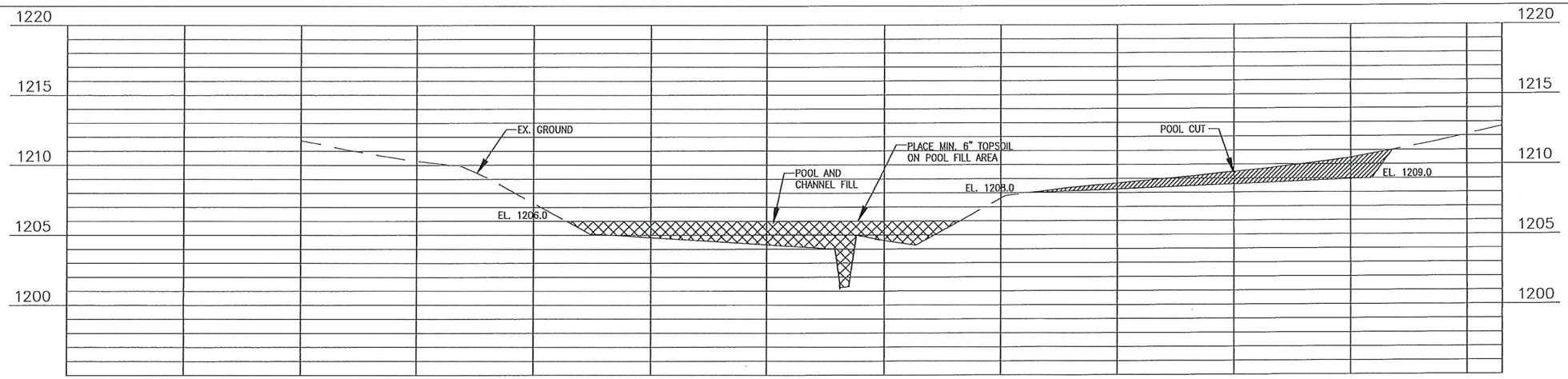

PROFILE SECTION A–A

EMERGENCY SPILLWAY SECTION

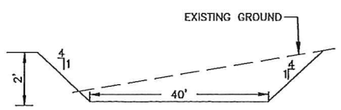

SHEET PILE

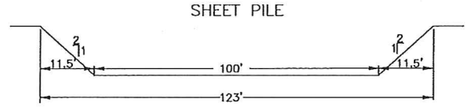

TILE	SIZE	OUTLET CMP LENGTH	TILE TYPE	TILE LENGTH	MIN. SLOPE, %
1	8"	20'	CPP	100 LF	0.1
2	8"	20'	CPP	150 LF	0.1
3	8"	20'	CPP	220 LF	0.1
4	12"	20'	CPP		
5	6"		CPP	180 LF	0.1
	8"	20'	CPP	150 LF	0.1
6	10"	20'	CPP	220 LF	0.1
7	SEE NOTE SHEET C.03				

NOTES:
1. GRADE TOP OF BERM WITH 3 TO 5 INCH CROWN.
2. SEED FACE AND LAST 10 FEET OF BERM WITH BROME GRASS.
3. PLACE 3' COVER OVER NEW TILE.

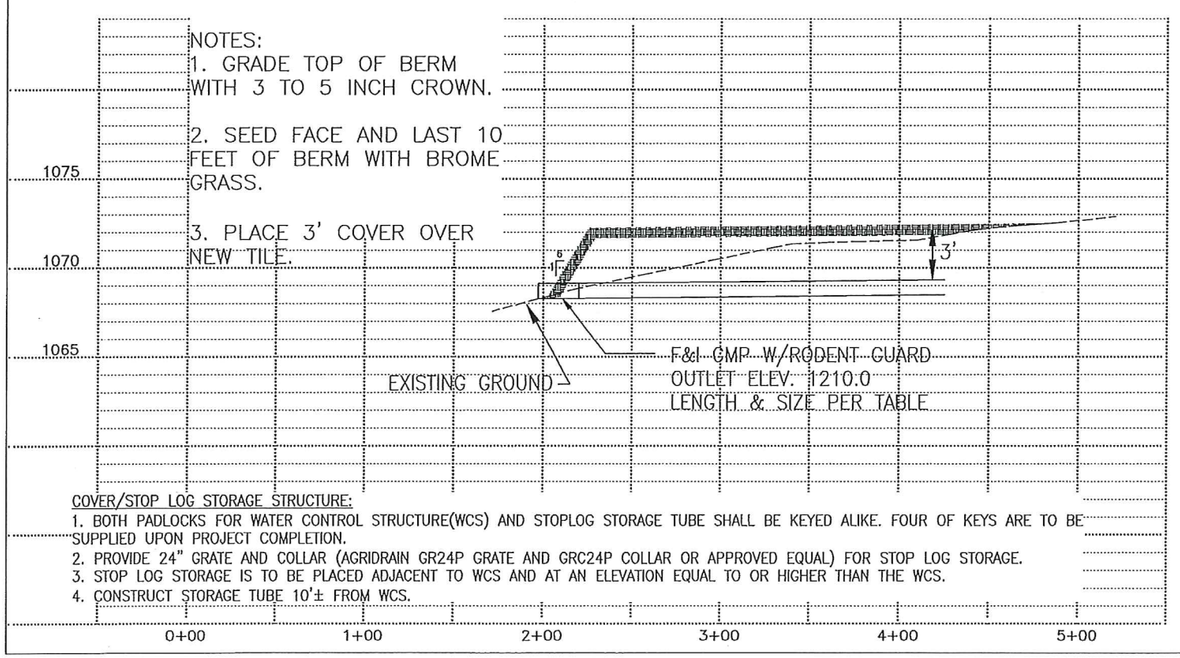

COVER/STOP LOG STORAGE STRUCTURE:
1. BOTH PADLOCKS FOR WATER CONTROL STRUCTURE(WCS) AND STOPLOG STORAGE TUBE SHALL BE KEYED ALIKE. FOUR OF KEYS ARE TO BE SUPPLIED UPON PROJECT COMPLETION.
2. PROVIDE 24" GRATE AND COLLAR (AGRIDRAIN GR24P GRATE AND GRC24P COLLAR OR APPROVED EQUAL) FOR STOP LOG STORAGE.
3. STOP LOG STORAGE IS TO BE PLACED ADJACENT TO WCS AND AT AN ELEVATION EQUAL TO OR HIGHER THAN THE WCS.
4. CONSTRUCT STORAGE TUBE 10'± FROM WCS.

STRUCTURE CROSS SECTION

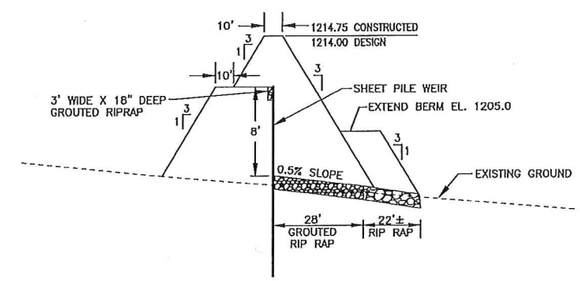

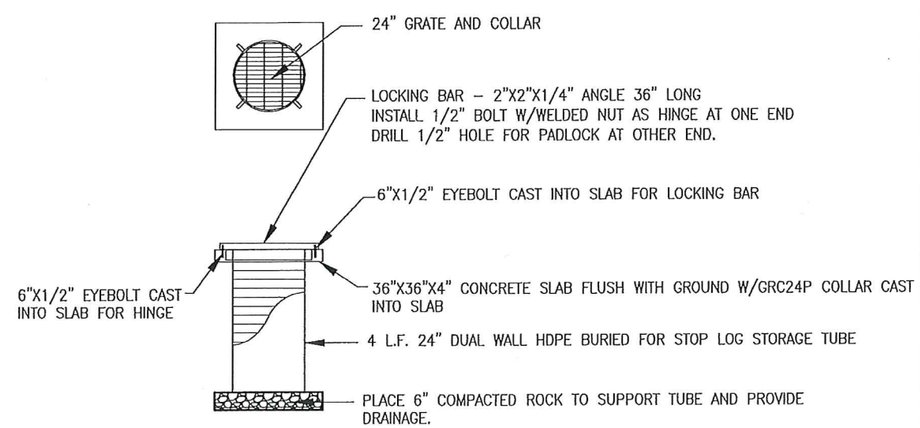

215 NORTH ADAMS AVENUE
MASON CITY, IOWA 50401
PHONE: 641.424.8344
www.sehinc.com
SEH

KOSSUTH COUNTY CREP
WETLAND PROJECT
SITE KOS952703D
KOSSUTH COUNTY, IOWA

MARK	DATE	DESCRIPTION
		REVISIONS

SEH FILE NO. 132936 – 10DAG
CITY PROJECT NO. ——
ISSUE DATE 2015
DESIGNED BY R.L.
DRAWN BY dk–
Short Elliott Hendrickson, Inc. © (SEH)

SHEET TITLE
DETAILS

SHEET
C.06

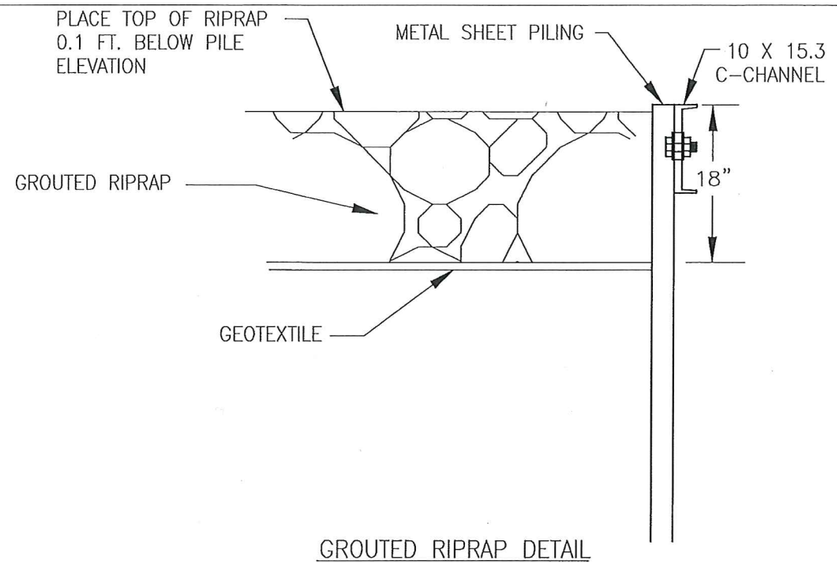

GROUTED RIPRAP DETAIL

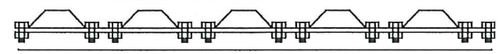

WALER BOLT PLACEMENT (WALER AGAINST SPLICES)

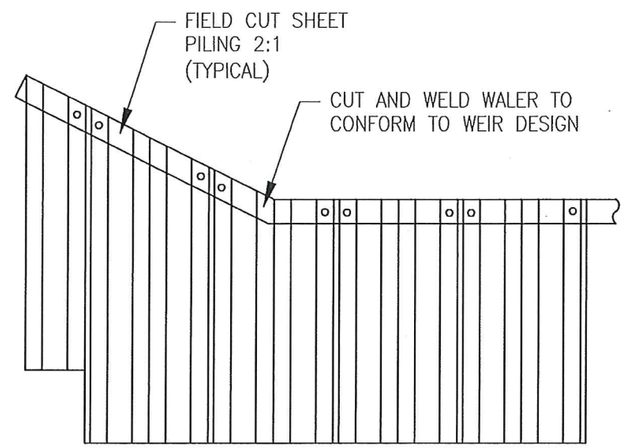

(NOT TO SCALE)

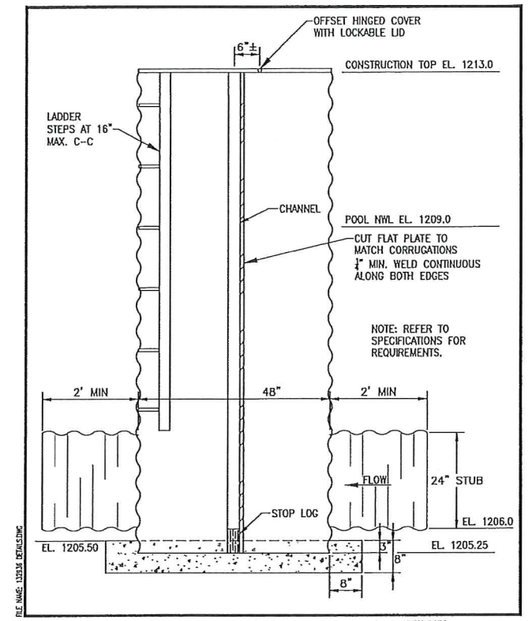

APPROVED	TITLE	STANDARD PLATE NO.
DATE 09/04/13	WATER CONTROL STRUCTURE	SPC – 2130

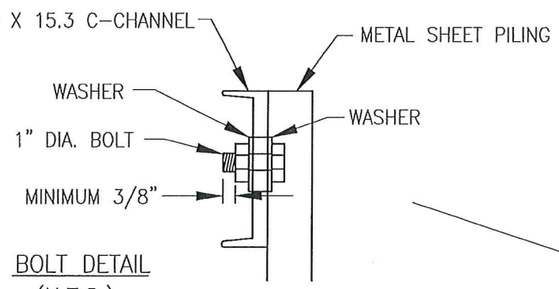

BOLT DETAIL
(N.T.S.)

NOTES:

1. ALL BOLTS WILL BE 1" DIA. W/2 WASHERS. BOLT WILL EXTEND AT MINIMUM 3/8" BEYOND NUT.
2. ALL HOLES WILL BE FIELD DRILLED 1/16" DIA. LARGER THAN THE BOLTS.
3. 2 BOLTS WILL BE USED WHEN THE WALER IS PLACED NEXT TO THE SPLICE. 1 BOLT WILL BE USED WHEN THE WALER IS PLACED OPPOSITE THE SPLICE.
4. WALER SHALL BE PLACED ON THE DOWNSTREAM SIDE OF WEIR.

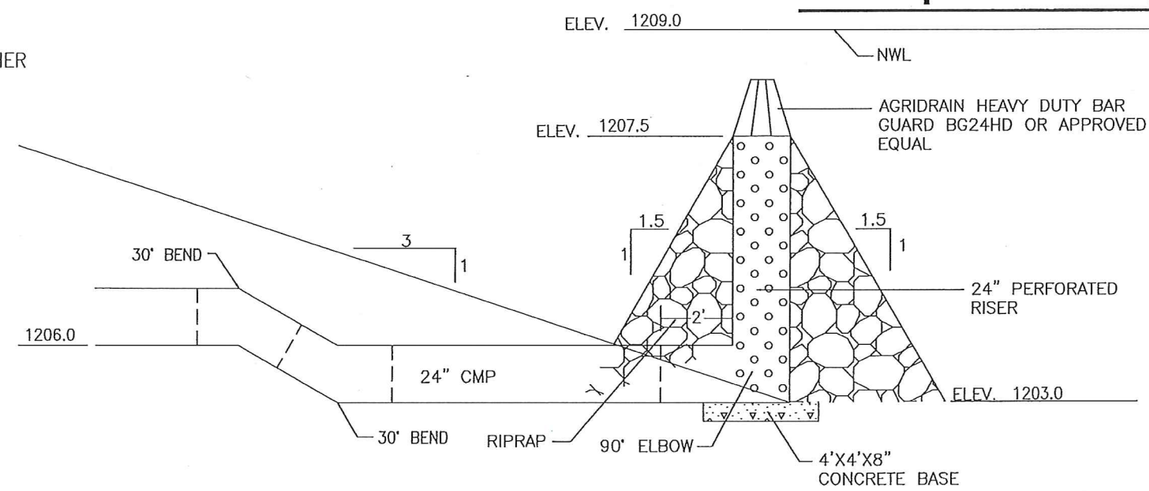

PERFORATED RISER DETAIL
N.T.S.

NOTES:

1. PERFORATED RISER TO BE LOCATED AT TOE OF EMBANKMENT.
2. PERFORATIONS SHALL BE 3–IN. DIAMETER, 6" ± C–C VERTICAL & 12" ± HORIZONTALLY, WITH PERFORATIONS STAGGERED.
3. PERFORATIONS TO EXTEND FULL LENGTH OF RISER & ELBOW.
4. PERFORATED RISER, BASE, ELBOW AND BAR GUARD ARE INCIDENTAL COST SUBSIDIARY TO WATER CONTROL STRUCTURE.
5. NO GEOTEXTILE TO BE PLACED WITH RIPRAP.

215 NORTH ADAMS AVENUE
MASON CITY, IOWA 50401
PHONE: 641.424.6344
www.sehinc.com
SEH

KOSSUTH COUNTY CREP
WETLAND PROJECT
SITE KOS952703D
KOSSUTH COUNTY, IOWA

MARK	DATE	DESCRIPTION
		REVISIONS

SEH FILE NO. 132936 – IODAG
CITY PROJECT NO. ------
ISSUE DATE 2015
DESIGNED BY R.L.L.
DRAWN BY dk–
Short Elliott Hendrickson, Inc. © (SEH)

SHEET TITLE
DETAILS

SHEET
C.07