CONSTRUCTION SPECIFICATIONS

INDEX

SECTION 02000 - SUBSURFACE INVESTIGATION

PART 1 - GENERAL

1.1 DESCRIPTION

PART 2 - PRODUCTS

Not Applicable

PART 3 - EXECUTION

Not Applicable

PART 1 - GENERAL

1.1 DESCRIPTION

A. Geotechnical and Hydrological Reports

1. A geotechnical study and if appropriate, a hydrological study, were prepared for this site as approved by the Division.

2. The results of the field and laboratory tests used for the design are compiled in an appendix. The approximate locations of any test pits, trenches, borings, and soil and water sampling points are shown on the Plans.

3. Complete reports may be reviewed at the office of the Division or the Engineer. Copies may be obtained at the cost of reproduction and handling upon request and payment to the Engineer.

B. Use of Field Data

1. The data presented in the appendix and any other completed reports were obtained and prepared for use during completion of the design and are NOT considered a part of the Contract Documents. This information is made available for bidder's use but is not a warranty of subsurface or hydrological conditions.

2. The data and report were prepared in accordance with generally accepted soil and water investigation procedures for abandoned mine reclamation project design. Any conclusions and recommendations made by others which are based on data presented in the appendix or other report are the sole responsibility of others.

3. Information included in the appendix and in the complete report presents only the data collected at the specific locations indicated and at the time samples or tests were performed. Variations may occur between testing and sampling locations, during different seasons of the year, or between the time of investigation and the time of construction.

C. Site Visit

1. Bidders should visit the site and acquaint themselves with existing conditions.

2. Prior to bidding, bidders may make their own subsurface investigations to satisfy themselves as to site and subsurface conditions, but such investigations may be performed only under time schedules and arrangements approved in advance by the Division.

PART 2 - PRODUCTS

No products are required in this SECTION.

PART 3 - EXECUTION

No work, nor measurement and payment, applies to this SECTION.

END OF SECTION 02000

INDEX

SECTION 02010 - FIELD ENGINEERING

PART 1 - GENERAL

1.1 DESCRIPTION
1.2 QUALITY ASSURANCE
1.3 SUBMITTALS

PART 2 - PRODUCTS

Not Applicable

PART 3 - EXECUTION

3.1 SURFACE CONDITIONS
3.2 DIMENSIONS AND ELEVATIONS
3.3 POSITION, GRADIENT, AND ALIGNMENT
3.4 FINAL PAY QUANTITY SURVEYS
3.5 INTERIM PAY QUANTITY SURVEYS
3.6 STAKE OUTS
3.7 RECORD SURVEY NOTES
3.8 MEASUREMENT AND PAYMENT

PART 1 - GENERAL

1.1 DESCRIPTION

A. Work Included

Work under this SECTION covers requirements for materials, tools, equipment, and services necessary to complete the Field Engineering of all work for this project. The work shall include, but is not necessarily limited to, completion of the following:

1. Surveys for acceptance of original ground lines
2. Stake Outs, including location and elevation of all work
3. Interim pay surveys as needed
4. Maintaining record survey notes and record plans (as-builts)
5. Final pay quantity surveys, including measurement of all bid items requiring taping or surveys
6. Preservation of the location of monuments, bench marks, apparent property lines, all existing fencing, and any other features as noted on the plan or in other portions of the specifications

1.2 QUALITY ASSURANCE

A. Contractor shall use adequate numbers of skilled workmen who are thoroughly trained and experienced in the necessary crafts and who are completely familiar with the specified requirements and the methods needed for proper performance of the work of this SECTION.

B. Contractor shall use equipment adequate in size, capacity, and numbers to accomplish the work in a timely manner.

C. In addition to complying with requirements of governmental agencies having jurisdiction, Contractor shall comply with the directives of Engineer and Division.

D. Survey work and recording of data shall be in accordance with acceptable standards of practice of engineering and land surveying professions. Survey work shall be done with a licensed professional engineer or a licensed land surveyor in responsible charge, in accordance with provisions of Chapter 542B, Code of Iowa. This requirement is waived for that portion of the work that can be and is surveyed by Contractor's own personnel.

1.3 SUBMITTALS

A. Record Plans (As Builts): Specific requirements for record plans are indicated in the General Conditions (Document N, Paragraph 2-05 A).

B. Record Survey Notes: Specific requirements for record survey notes are indicated in the General Conditions (Document N, Paragraph 2-05 C), and in 1.2 D above.

C. Survey notes of locations of all monuments, benchmarks, existing fences, and any other reference points that will be disturbed as part of construction.

PART 2 - PRODUCTS

Not Applicable

PART 3 - EXECUTION

3.1 SURFACE CONDITIONS

A. Contractor shall examine the areas and conditions under which work of this SECTION will be performed and correct conditions detrimental to timely and proper completion of the work. Contractor shall not proceed until unsatisfactory conditions are corrected.

3.2 DIMENSIONS AND ELEVATIONS

A. Contractor shall verify in the field all dimensions and elevations which are required. Elevations indicated and referred to in the Specifications and on the Plans are based on the bench mark datum shown on the Plans. Horizontal and vertical control reference points shown on the Plans shall be re-established as necessary by Contractor prior to performing any layout of the work. Contractor shall promptly notify Engineer in case of discrepancies.

3.3 POSITION, GRADIENT, AND ALIGNMENT

A. Competent survey personnel employed and paid by Contractor shall lay out and stake out all control points and reference stakes required for construction of the work. Contractor shall carefully preserve all existing monuments, bench marks, fence locations, and reference points shown on the Plans or encountered during construction. All existing monuments, bench marks, fence locations, and other reference points shall be surveyed prior to commencement of construction in these areas with the survey notes provided to Engineer. When necessary or requested, Contractor shall repair or replace damaged reference points at no cost to Division.

B. All work performed under this Contract shall conform with the lines, grades and elevations shown on the Plans and with any tolerances which may be set forth in the Construction Specifications.

C. All work completed without being properly located and established from the control reference points and bench marks shown on the Plans may be ordered removed and replaced at no cost to Division.

D. Features such as terrace high points and low points, terrace outlets, ditches, etc., are shown on the Plans. Locate all features by coordinates or dimensions shown on the Plans. If no coordinates or dimension are shown, Contractor shall obtain this information electronically or request coordinates from Engineer.

3.4 FINAL PAY QUANTITY SURVEYS

A. Any work item requiring field measurements shall be measured in place by Contractor accompanied by Engineer after said item is complete. Measurements shall be performed as agreed to by both the Engineer and Contractor.

B. In the event surveying is required for final pay quantity, this work shall be performed and certified by a licensed professional engineer or licensed land surveyor in responsible charge.

3.5 INTERIM PAY QUANTITY SURVEYS

A. Any item of work which requires field measurements and which is not being submitted as final for that item, need not be certified.

3.6 STAKE OUTS

A. The number of earthwork stake outs is open to Contractor. A minimum of two (2) stake outs are required for earthwork. The first stake out shall be near the beginning of the project to help establish rough grading limits, along with clearing and project limits. A final stakeout is required to establish final grades. Interim stake outs shall be used at Contractor's discretion. The stake out used to establish final grades shall include stakes set on a one hundred (100) foot grid, follow along contour lines with maximum one-hundred (100) feet spacing along the contour, or as needed to result in final grading consistent with project plans. Additional staking may be required to represent all site features. Engineer may request additional grade stakes to verify site features and/or elevations. Stake outs are not to be confused with required surveys for measurement purposes or as-built surveys.

3.7 RECORD SURVEY NOTES

A. Contractor shall maintain a minimum of three (3) copies of all construction survey notes continuously throughout project completion. One copy of all such notes shall be furnished to Engineer immediately as field construction surveys are completed by Contractor-retained survey personnel. A copy of these notes shall be preserved by Contractor and submitted to Division along with other record document submittals prior to project closeout. If the data is obtained electronically, then an electronic file shall be provided to Engineer in the requested format in lieu of paper copies.

3.8 MEASUREMENT AND PAYMENT

A. Field Engineering shall not be a payment item. Payment for Field Engineering shall be incidental to all items requiring Field Engineering.

END OF SECTION 02010

INDEX

SECTION 02100 - MOBILIZATION, SITE CLEARING & PREPARATION

PART 1 - GENERAL

1.1 DESCRIPTION
1.2 QUALITY ASSURANCE
1.3 JOB CONDITIONS
1.4 SUBMITTALS

PART 2 - PRODUCTS

2.1 MATERIALS

PART 3 - EXECUTION

3.1 SURFACE CONDITIONS
3.2 PROTECTION
3.3 OFFICE AND LAY-DOWN AREA
3.4 EXISTING FENCES
3.5 CLEARING AND GRUBBING
3.6 DEBRIS REMOVAL AND DISPOSAL
3.7 PROJECT SIGN
3.8 CLEAN-UP AND REPAIRS
3.9 MEASUREMENT AND PAYMENT

PART 1 - GENERAL

1.1 DESCRIPTION

A. Work included

Work under this SECTION covers requirements for materials, tools, equipment, and services necessary to complete the site preparation and site cleanup work for this project. The work shall include, but is not necessarily limited to, completion of the following work:

1. Mobilization
2. Establishment of offices and project trailer
3. Installation of project sign
4. Establishment of sanitary facilities
5. Removal and salvage of existing fencing
6. Installation and removal of temporary fencing
7. Protection of existing utilities, vegetation, and facilities to remain undisturbed
8. Site clearing and grubbing
9. Debris removal and disposal
10. Demobilization

1.2 QUALITY ASSURANCE

A. Contractor shall use adequate numbers of skilled workmen who are thoroughly trained and experienced in the necessary crafts and who are completely familiar with the specified requirements and the methods needed for proper performance of the work of this SECTION.

B. In addition to complying with requirements of governmental agencies having jurisdiction, Contractor shall comply with the directives of Engineer and Division.

C. Applicable Standard: Iowa State University (ISU) Extension Service Publication PM-909, "Preventing Construction Damage to Trees".

D. Contractor shall comply with guidelines to protect the Indiana Bat as provided in the Appendix.

1.3 JOB CONDITIONS

A. The Plans do not purport to show all objects existing on the site.

B. The locations of utility mains, structures, and service connections shown on the plans are approximate only and were obtained from records made available to Engineer and Division. There may be other existing utilities not known to Engineer and Division and not shown on the Plans. The verification of existence and the exact location determination of utility mains, structures, and service connections shall be the responsibility of Contractor.

C. Contractor shall not perform any work on or cause any damage to existing CRP land, wetlands, or any other jurisdictional lands that are indicated on the Plans as not to be disturbed. Division has no permit to disturb these areas. These areas are under the jurisdiction of other authorities and there could be fines levied against Contractor for disturbance in these areas. If damage does occur to these areas, Contractor shall restore them to an acceptable condition at no cost to Division.

D. Contractor shall not perform work under the drip line of trees that are to remain. Contractor may request that certain trees within the Project Limits shown on the Plans remain in place. If permission is granted, Contractor shall protect these tree(s) from damage.

E. Materials to be handled under this Contract include spoil, gob and coal refuse which may be toxic and/or acidic in nature.

F. Contractor shall not use explosives without written approval of Engineer.

G. Unless indicated otherwise in the Contract Documents, removed, salvaged or demolished materials shall be considered to be the property of Contractor. Contractor-salvaged materials and demolished materials shall be completely removed from the job site or buried on site as approved by Engineer. Any items indicated in the Contract Documents to be salvaged to the landowner, such as existing fencing, shall be stored on site at a location approved by Engineer.

H. Contractor shall conduct all work in a manner which shall minimize, to the greatest practical extent, inconvenience to the public, and which shall result in a final product which leaves the site in an equal or better condition than prior to construction.

I. Trees having a diameter of greater than nine (9) inches shall not be cleared between the dates of April 15 to September 15.

1.4 SUBMITTALS

A. Contractor shall provide to Engineer a description and the location of any alternative off-site disposal area to be used other than a licensed landfill.

B. Contractor shall submit a Construction Progress Schedule as specified in SECTION 3-24 CONSTRUCTION SCHEDULE of the General Conditions (*Document N*).

C. Contractor shall submit weight tickets or billings for all off-site waste disposal, including trash, metal, appliances, tires, hazardous chemicals, etc. to Engineer.

D. Contractor shall provide Engineer with record survey notes of all existing fence locations within the projects limits and any adjacent fencing to be temporarily removed prior to removing any existing fence.

PART 2 - PRODUCTS

2.1 MATERIALS

A. Provide materials, not specifically described but required for proper completion of the work of this SECTION, as selected by Contractor subject to the approval of Engineer.

PART 3 - EXECUTION

3.1 SURFACE CONDITIONS

A. In company with Engineer, visit the site and verify the extent and location of clearing and site preparation required. Completely remove items scheduled to be removed, leaving surfaces clean, solid, and ready to receive new materials specified elsewhere.

B. All trees outside the Project Limits shown on the Plans shall remain undisturbed. All trees within the Project Limits, except as noted hereafter, shall be removed. In areas of the site where minimal grading is required, the grading plan should be adjusted slightly in favor of saving well established trees. Cooperate with Engineer to achieve this intent.

3.2 PROTECTION

A. Contractor shall be responsible for locating and protecting all utilities prior to initiating work. If damage does occur to any existing utilities, Contractor shall restore them in a manner acceptable to the utility provider and Engineer at to cost to Division.

B. Contractor shall protect existing vegetation as discussed below.

1. Protect tops, trunks, and roots of existing trees and/or shrubs, indicated or implied to remain, from damage during all operations. Box, fence around, or otherwise protect trees before adjacent work is started. Do not permit heavy equipment or stockpiles within branch spread. Trim or prune to obtain working space in lieu of complete removal whenever possible. Conform with good horticultural practices. Preserve natural shape and character. Refer to ISU Publication PM-909, "Preventing Construction Damage to Trees".

2. Damaged trees shall be repaired or replaced to the satisfaction of Engineer. Repair may include, but not be limited to, trimming, pruning, and application of pruning paint. Repair shall be completed within seventy two (72) hours of occurrence of damage. Remove existing vegetation when damage occurs and survival is doubtful.

3. Adjacent areas to the site with established vegetation shall be protected. If access through established vegetation is required, Contractor shall coordinate his access with Engineer and restore the damaged areas as directed by Engineer.

C. Contractor shall provide protection for persons and property as discussed below.

1. Barricade open depressions and holes occurring as part of this work.

2. Protect structures, utilities, and other facilities from damage caused by settlement, lateral movement, undermining, washout, burning of landscape waste, equipment vibration, and other hazards created by operations under this SECTION.

D. Contractor shall use means necessary to prevent dust from becoming a nuisance to the public, to neighbors, and to other work being performed on or near the site.

E. Contractor shall maintain access to the site at all times.

F. When requested by Division or Engineer, Contractor shall provide access through the site on an as needed basis to the landowner when access to adjacent lands is restricted.

3.3 OFFICE AND LAY-DOWN AREA

A. Contractor shall establish, provide, and initiate use of temporary facilities described herein within thirty (30) days of the initiation of construction activities and prior to the first Progress and Pay Request Meeting. The offices and lay-down area can be located anywhere within the Project Limits. The offices and/or lay-down area may be located outside the Project Limits, but only if the location is approved in writing by the landowner on whose property these facilities are located. In addition the location of Contractor supplied Engineer's Field Office must be approved by Engineer.

B. Engineer’s Field Office

1. Provide one hundred (100) square feet office (locked, heated, air conditioned, lighted and wired with electrical power) for Engineer's Representative.

2. Engineer’s office can be separate compartment in Contractor's Field Office.

C. Contractor's Field Office

1. Provide adequate space for field office personnel, suitably furnished, lighted, heated and air conditioned.

D. Unless specifically indicated elsewhere in the Contract Documents, Contractor shall provide all electric, heat, power, water, telephone, sanitary, and any other utilities or facilities required to perform the work.

E. Contractor shall terminate use and remove facilities at earliest reasonable time when they are no longer needed. Removal of all temporary facilities is required for final acceptance of the completed project.

3.4 EXISTING FENCES

A. Any existing fences within the project limits that are indicated to remain shall be protected. If these fences are damaged, the Contractor shall repair them at no cost to Division. Fences outside of the Project Limits which interfere with construction operations shall not be relocated or dismantled until approval is obtained from Engineer. In areas where existing fences outside of the Project Limits cannot be maintained due to construction operations, Contractor will be required to provide temporary fences or other means to prevent unauthorized vehicular, pedestrian or livestock access, as applicable. After work is completed in this area, a replacement fence of the same material type or better shall be replaced at the same location at no cost to Division.

B. Existing fences within the project limits shall be removed. If the plans indicate the fence is to be salvaged to landowner(s), fencing material shall be rolled in neat bundles and secured with salvaged posts stacked neatly and stored at a location on site to be approved by Engineer. If the landowner(s) do not want the fence salvaged to them, the fencing material becomes the property of Contractor and shall be disposed of as discussed in 3.6 below.

C. Where existing fences are removed and subsequently replaced as a part of the work, field establish such reference points and ties as are necessary to ensure replacement fencing will follow the same alignment as the existing fencing.

3.5 CLEARING AND GRUBBING

A. Contractor shall perform clearing and grubbing only to the extent necessary to perform excavation, grading, and other required work.

B. Clearing includes felling and disposal of trees, brush, and other vegetation. In cutting of timber growth, cuts shall be made such that all trees are felled into the area to be cleared. Exercise care when clearing near the Project Limits so as not to damage existing trees or vegetation to remain.

C. Clearing also includes removal of all existing fencing materials as discussed in 3.4 above.

D. Grubbing includes removal and disposal of tree stumps and roots larger than three (3) inches in diameter. Stumps and roots within three (3) feet of final (proposed) grades shall be grubbed. Backfill all excavated depressions with nearby soil or spoil material, compact to approximate density of adjacent undisturbed areas, and grade entire area to drain.

E. In areas where the fill depth is greater than three (3) feet, undisturbed stumps and roots extending not more than six (6) inches above the ground line and surface vegetation do not need not be removed unless they are located within the vicinity of a dam, terrace, or other structural element.

3.6 DEBRIS REMOVAL AND DISPOSAL

A. Contractor shall remove and dispose of debris, rubbish, landscape waste and all other materials resulting from the site clearing and preparation operations by either recycling, burning, burying, off-site disposal, chipping, creating brush piles, or a combination thereof. Specifics requirements for various disposal techniques are discussed below.

B. Burning of Landscape Waste

1. State law requires that burning of landscape waste be limited to areas located at least one-quarter (1/4) mile from any inhabited building, unless a variance is obtained from the Iowa Department of Natural Resources.

2. Contractor shall obtain all necessary permits and comply with all regulatory agencies, including the local Fire Department, governing this work. The local Fire Department must be notified prior to any on site burning.

3. Only vegetative matter may be burned on site. Oil base materials are not allowed to be burned on site. Rubber tires cannot be used to start or maintain burning of brush.

4. No burning will be allowed on any area of the site containing coal refuse.

5. Large trees and stumps may require two (2) or more burning sequences. Tree trunks and limbs greater than three (3) inches in diameter may be sawn or cut in lengths not greater than forty-eight (48) inches and buried in lieu of burning.

6. Protection of property, trees and vegetation that are to remain, both inside and outside the Project Limits, shall be maintained at all times.

C. Burying

1. Trees, stumps, brush, and the ashes from the burning of landscape waste may be buried within the project limits provided the requirements below are followed.

   a. No burying of debris shall be completed within areas of the site that contains dams, terraces, any other structures, or where future settlement would be detrimental to the successful reclamation of the site.

   b. Uncut trees may be placed in dewatered ponds containing muck to provide support. The trees shall be placed uniformly over the muck and shall not exceed a total thickness of five (5) feet.

   c. All products to be buried not providing support over muck shall be broken or cut to a maximum dimension of forty-eight (48) inches and shall be spaced so normal fill material can be properly placed and compacted thereon. Mass dumping, without spreading and spacing of debris, will not be allowed. Buried debris shall not be allowed to accumulate greater than five (5) feet in depth and shall be covered with a minimum of five (5) feet of cover per foot of debris. The top of the uppermost buried debris shall be at least five (5) feet below final grade. Burial operations shall be permitted only in the presence of Engineer.

2. Farm buildings may be buried provided they are emptied of any contents not authorized for burial and laid flat. Burial operations shall be permitted only in the presence of Engineer.

D. Habitat Brush Piles

1. Brush piles for habitat may be used in some areas if permission is received from the landowner.

2. The location and number of brush piles shall be approved by Engineer.

3. Brush piles shall not exceed fifty (50) feet in diameter and ten (10) feet in height.

E. Off-site Waste Disposal:

1. Any household trash, tires, hazardous materials, etc. present at the site, whether shown on the plans or encountered during construction, shall be removed off-site to a licensed landfill or other location approved by Engineer. Weight tickets or billings are required for payment purposes.

2. Small debris and trash shall be removed and sorted by hand. Additional sorting may be requested by Engineer or Division prior to weighing if it is determined that excessive amounts of soil are included with the trash.

3. Metal objects present at the site shall be salvaged where possible or taken to a licensed landfill or other approved location.

3.7 PROJECT SIGN

A. Contractor shall provide project identification sign to be detailed as shown on the Plans. Location of the project sign shall be approved by Engineer.

B. Upon completion of all the work and final acceptance by Division, Contractor shall be responsible to remove the "Hard Hat Area" portion of the sign.

3.8 CLEAN-UP AND REPAIRS

A. Contractor shall remove equipment, project materials, and wastes such as oil drippings, stones, gravel, packaging containers, etc., from the site and dispose of wastes at an approved off-site location.

B. Contractor shall repair all areas of rill erosion with a depth greater than three (3) inches and width greater than four (4) inches, or as directed by Engineer.

C. All disturbed areas outside the Project Limits, such as entrance and haul roads and lay down areas, shall be returned to their original condition by Contractor and as approved by the Engineer.

D. The materials, equipment, and labor for clean up and repairs are at no cost to Division.

3.9 MEASUREMENT AND PAYMENT

The construction cost of all work included in this SECTION of the Construction Specifications shall be included in Contractor's unit prices set forth in the Proposal and Schedule of Prices *(Document C)* for the work items described below. The unit price for each of these items shall include its pro rata share of overhead so that the sum of the products obtained by multiplying the unit prices so set forth by the amount of the work actually constructed, measured as described herein, shall constitute full payment to Contractor for performance of the work included in this SECTION.

Measurement and payment for each work item in this SECTION shall be in accordance with the following:

A. *Mobilization:* Payment for the cost of mobilization and demobilization and other work incidental thereto shall be included in the lump sum price set forth for "Mobilization." The lump sum price set forth in Contractor's Proposal and Schedule of Prices (*Document C*) shall include full compensation for mobilization; for preparatory work and operations necessary for the movement of personnel, equipment, supplies, and incidentals to and through the site; for establishment of offices, trailers, and other facilities necessary for work on the project; for installing the project sign and removing a portion thereof; for demobilization, and cleanup and repairs; for all other work or operations which must be performed or costs incurred when beginning or performing work on the project including bonding, insurance, obtaining permits, filing affidavits, paying fees, etc. See General Conditions (*Document N*) Item 6-01 and any permits included in an appendix to the specifications.

The amount which Contractor will receive payment for, in accordance with the following schedule, will be limited to five percent (5%) of the total Contract bid. Should the Contractor's bid for this item exceed five percent (5%), the amount over five percent (5%) will not be paid until the Contract is finalized.

Basis of Payment: Partial payment of the lump sum amount bid for Mobilization, not exceeding five percent (5%), will be made in accordance with the following schedule:

1. Upon Contract execution, ten percent (10%) of the pay item will be paid.

2. When five percent (5%) or more of the original Contract amount is earned, an additional twenty percent (20%) of the pay item will be paid.

3. When ten percent (10%) or more of the original Contract amount is earned, an additional twenty percent (20%) of the pay item will be paid.

4. When fifty percent (50%) or more of the original Contract amount is earned, the remaining balance of the pay item will be paid up to a maximum of five percent (5%) of the total bid.

Nothing herein shall be construed to limit or preclude partial payments for other items as provided for by the Contract.

B. *Clearing & Site Preparation:* The unit price for this work item, as shown in Contractor's Proposal, shall include full payment to Contractor for all clearing, site preparation, debris removal and disposal, fence removal, and other work incidental thereto as required to complete the Project in accordance with requirements of the Contract Documents. This work shall be completed within all areas disturbed by construction operations and limited to the total area enclosed by the "Project Limit" lines shown on the Plans. Partial payments will be made based upon the estimated number of acres cleared or the percentage of clearing that is completed at the time of the pay request.

C. *Off-site Waste Disposal:* The unit price for this work item as shown in Contractor's Proposal, shall include full payment to Contractor for all work necessary to collect, load, transport, landfill fees

and other work incidental thereto as required to complete the project in accordance with the requirements of the Contract Documents. The waste materials will be measured on the loaded ton as determined from weight tickets. The total estimated quantity for this work item includes only the household trash from the locations noted. Handling and disposal of special items such as tires, batteries, or hazardous waste, will be paid for separately. All other trash and debris will be disposed of in accordance with these specifications.

D. *Summary:* Proposal Bid Items applicable to work covered by this SECTION are as follows:

Description	Unit
Mobilization	Lump Sum
Clearing and Site Preparation	Acre
Off-site Waste Disposal	Ton
Special Waste Disposal	Per Ticket

END OF SECTION 02100

INDEX

SECTION 02110 - IMPOUNDMENTS

PART 1 - GENERAL

1.1 DESCRIPTION
1.2 QUALITY ASSURANCE
1.3 PERMITS
1.4 JOB CONDITIONS
1.5 SUBMITTALS

PART 2 - PRODUCTS

2.1 LIME MATERIALS
2.2 DELIVERY, STORAGE, AND HANDLING

PART 3 - EXECUTION

3.1 SURFACE CONDITIONS
3.2 PRECAUTIONS
3.3 WATER SAMPLING AND TESTING (ALL PONDS)
3.4 NEUTRALIZATION AND DISCHARGING PLANNING MEETING
3.5 WATER TREATMENT (PONDS REQUIRING NEUTRALIZATION PRIOR TO DISCHARGING)
3.6 DISCHARGE OF IMPOUNDMENTS
3.7 TREATMENT AND DISCHARGE SUMMARY
3.8 MEASUREMENT AND PAYMENT

PART 1 - GENERAL

1.1 DESCRIPTION

A. Work Included

Work under this SECTION covers requirements for materials, tools, equipment and services necessary to complete the neutralization of the acid water and discharge of the impoundments for this project. The work shall include, but is not necessarily limited to, completion of the following work:

1. Water quality testing of existing water bodies to be discharged.
2. Development of the Neutralization and Dewatering Plan
2. Neutralization of acid water
3. Water quality verification tests
4. Discharge of neutralized ponds

1.2 QUALITY ASSURANCE

A. Contractor shall use adequate numbers of skilled workmen who are thoroughly trained and experienced in the necessary crafts and who are completely familiar with the specified requirements and the methods needed for proper performance of the work of this SECTION.

B. Contractor shall use equipment adequate in size, capacity, and numbers to accomplish the work in a timely manner.

C. In addition to complying with requirements of governmental agencies having jurisdiction, Contractor shall comply with the directives of Engineer and Division.

1.3 PERMITS

A. Division and hence Contractor must comply with the requirements of a National Pollutant Discharge Elimination System (NPDES) permit for discharge of water off the site. The water quality standards for discharged water are specified in this SECTION.

1.4 JOB CONDITIONS

A. The site requires dewatering of water bodies to complete the required grading. The anticipated water bodies to be dewatered are indicated on the Plans. However, depending on weather conditions prior to and during construction, the number of water bodies required to be dewatered may be more or less than the number shown on the Plans.

B. Some sites have water bodies that are not to be disturbed and shall remain at the site. These water bodies, if any, are identified on the plans. Care should be taken to minimize disturbance to the areas surrounding these water bodies and minimize the amount of sediment delivered to them.

C. Water quality evaluations of the water bodies at the site have been taken during project development. Those water bodies anticipating treatment prior to discharge are noted on the Plans. Water quality can change over time and new tests of all water bodies requiring discharge must be taken during construction and prior to discharge to determine if treatment is required and to what extent. It is also possible that water quality can change during discharging operations, requiring cessation of discharging operations and additional treatment before discharging can continue.

D. Water that does not meet the NPDES parameters may not be discharged off site until acceptable neutralization is obtained. Contractor may not proceed with liming treatment(s) without the approval of Engineer.

E. The materials used to neutralize acidic water are caustic and Contractor shall take appropriate precautionary measures when handling hydrated lime. See Item 3.2 in this SECTION.

1.5 SUBMITTALS

A. Laboratory Approval

Contractor shall select a testing laboratory to provide testing required under this SECTION. The name and address of the testing laboratory to be used in this work shall be submitted to and must be accepted by Engineer prior to start of this work.

The testing laboratory may perform the required testing on site provided the work plan describing the proposed treatment, equipment, and the field methods of testing have been accepted by Engineer prior to start of this work. Field testing equipment must meet the minimum resolution capabilities and be able to provide measurements within the minimum ranges listed below:

MINIMUM FIELD TESTING EQUIPMENT REQUIREMENTS

Parameter	Units	Range	Increments
pH	unit	4.0-10.0	0.1 units
total iron	mg/l	0.5-10.0	0.1 mg/l
total manganese	mg/l	0.5-10.0	0.1 mg/l
suspended solids	mg/l	0-500	5.0 mg/l
acidity/alkalinity	mg/l	As needed	5.0 mg/l

B. Certification and Receipts

1. Submit certification that liming agents meet the minimum criteria of this SECTION.

2. Submit receipts and weigh tickets of liming agents delivered to the project site.

C. Test Results

1. Submit results of water quality test results for both before and after neutralization, neutralization determinations, and field quality tests taken during discharge operations.

PART 2 - PRODUCTS

2.1 LIME MATERIALS

A. Hydrated lime [$Ca(OH)_2$] shall meet requirements of ANSI/AWWA B202-93 and shall not have less than sixty-two percent (62 %) available calcium oxide which is equivalent to eighty-one and nine-tenths percent (81.9%) calcium hydroxide.:

2.2 DELIVERY, STORAGE AND HANDLING

A. Deliver liming agents to the site in their original containers with all labels or certificates intact and legible for Engineer's inspection.

B. Contractor shall use all means necessary to protect materials from the elements during storage and handling.

C. In the event of damage or rejection, Contractor shall immediately make all replacements necessary to the approval of Engineer at no additional cost to Division.

PART 3 - EXECUTION

3.1 SURFACE CONDITIONS

A. Examine the areas and conditions under which work of this SECTION will be performed. Correct conditions detrimental to timely and proper completion of the work. Do not proceed until unsatisfactory conditions are corrected.

3.2 PRECAUTIONS

A. Hydrated lime is a caustic material. Sustained and unprotected exposure to hydrated lime may be hazardous to workers. Contractor shall instruct workers in the proper handling of bulk lime and lime slurry and shall take all necessary steps to protect working personnel and the general public.

3.3 WATER SAMPLING AND TESTING (ALL PONDS)

A. Contractor shall obtain composite samples of all impounded water to be treated or discharged. This round of composite samples from each pond shall be used to determine if treatment is necessary or not. If treatment is not necessary, the pond may be discharged. If treatment is necessary, the test results shall be used to evaluate the amount of lime required to neutralize the acid water.

B. Contractor shall collect composite samples and submit for testing as follows:

1. At least one (1) composite water sample shall be taken from each impoundment. Impoundments containing more than ten (10) acre-feet of water shall have one (1) additional sample shall be taken for every ten (10) acre-feet of water or fraction thereof.

2. A composite sample shall consist of equal parts of four surface samples taken throughout the area the composite sample represents. The location of all sampling points shall be such that when all the composite samples are obtained for a given pond, they are representative of the entire pond area insofar as practical.

3. Obtain sample bottles of proper type and size with appropriate preservatives, as well as sample gathering and delivery procedures, directly from the laboratory. Store and ship samples refrigerated (under ice) if and as required by laboratory.

4. Each composite sample shall be delivered to the approved laboratory within 24 hours of collection. Each composite sample shall be tested for pH, total acidity/alkalinity (mg/l), total iron (mg/l), total manganese (mg/l), and total suspended solids (mg/l).

5. Contractor shall submit copies of the laboratory results to Engineer and Division prior to the meeting at the site to develop the neutralization or discharge plan.

6. Contractor shall pay all costs associate with sampling and testing.

3.4. NEUTRALIZATION AND DEWATERING PLANNING MEETING

A. Contractor, Engineer, and Division shall meet at the site to discuss and develop the neutralization and dewatering plan. The Contractor foreman or other personnel who will be responsible for this portion of the work must be in attendance at this meeting. The minutes of this meeting shall be prepared by Engineer and distributed to all parties prior to initiating this portion of the work. The neutralization and dewatering plan shall at a minimum include the following:

1. Schedule for completion of neutralization if necessary, and dewatering for all ponds along with a list of personnel planned to complete this work.

2. In the case of multiple acidic ponds, the proposed order in which the ponds will be neutralized and dewatered. Water may be moved within the site from one pond to another before neutralizing or discharging off site. This can be done by pumping or gravity flow, provided that all three of the conditions listed below are met.

   a. The receiving pond is structurally sound and has adequate capacity to contain the discharge.

   b. There is no significant transfer of soft sediment (muck) into the receiving pond.

   c. There is no outflow of water off the project site.

3. Laboratory approval information as required in Paragraph 1.5 A. Laboratory Approval in this SECTION.

4. Method(s) to be used to neutralize the water, including the number and types of equipment to be used. If multiple methods are used, it shall be determined which method will be used on each pond.

5. Proposed water sampling methods used to assure that neutralized water meets NPDES discharge limits as outlined in Item 3.4 WATER TREATMENT found in this SECTION.

6. A copy of the site plan(s) showing the routes of discharge for each pond and location of any constructed basins or modified ponds used for neutralization of acidic water on site.

7. Erosion protection to be used on discharge routes.

8. Safety precautions to be used to assure workers will be protected from the caustic effects of hydrated lime.

3.5 WATER TREATMENT (PONDS REQUIRING NEUTRALIZATION PRIOR TO DISCHARGE)

A. Hydrated lime for neutralization of acid impoundments shall not be applied during periods where the temperature is anticipated to be below freezing.

B. Applications of lime as a dry powder directly to the water surface over the entire pond shall not be permitted. The hydrated lime shall be mixed with the impounded water and applied as a slurry.

C. The impounded water shall be continuously circulated during application of the slurry to assure thorough mixing of the lime slurry and impounded water.

D. After ponds requiring treatment are neutralized with a pH of between 6.0 and 9.0, a second round of composite samples shall be obtained. If this second round test results indicate unacceptable pH, total iron, total manganese, or total suspended solids, the water shall be retreated if necessary, remixed, or any other action as may be required. Restests are required until acceptable laboratory results are obtained.

E. Timing is critical for this task. Samples must be analyzed and, discharge must be initiated as soon as possible when results are within NPDES parameters. If a rainfall event occurs that creates runoff into the impoundments between the time samples are collected and tested and prior to discharge, new samples must be taken and tests performed.

F. No acidic spoil material may be placed in the water body after the water samples are taken and prior to discharge.

G. If it is determined that Contractor's actions has caused treated water to no longer meet the NPDES discharge parameters, Contractor shall retreat the water as needed at no additional cost to Division.

3.6 DISCHARGE OF IMPOUNDMENTS

A. Impounded water, whether treated or untreated, shall not be discharged off-site unless Engineer is present, and not until the testing performed by Contractor indicates the discharge effluent is within the following NPDES parameters:

1. pH between 6.0 and 9.0
2. Total iron content less than 7.0 mg/l
3. Total manganese content less than 4.0 mg/l
4. Total suspended solids less than 70 mg/l

B. The impoundment shall be discharged immediately after the water meets the discharge parameters and has been accepted by Engineer. New samples and tests shall be required if discharging the water is delayed by Contractor, acidic seeps into the pond are discovered, or significant precipitation occurs or the field tests indicate a change pH outside the acceptable discharge limits.

C. Once favorable laboratory results have been obtained and discharge commences, Engineer shall periodically test the discharge for pH. If the pH of the discharge changes to below 6.0 or above 9.0, Contractor shall cease discharging, retreat as appropriate, and obtain a satisfactory test result prior to further discharge.

D. Contractor shall discharge all impoundments before any ice is present on the surface of the water. Any impoundment not discharged prior to surface ice formation shall be retreated as needed at no additional cost to Division.

F. Contractor shall prevent soil erosion in the area downstream of the discharging facility. Silt fences, or other silt collectors may be necessary to contain erosion of acid soils.

G. Contractor shall take appropriate actions to prevent further accumulation of surface runoff or seepage immediately after the impounded water is discharged. Contractor shall be responsible for testing, treating, and discharging any water that is impounded due to surface runoff or seepage after the initial discharge has been completed at no cost to Division

3.7 TREATMENT AND DISCHARGE SUMMARY

A. The table provided in the Supplemental Specifications or Plans presents data from samples taken at the time field investigations were conducted to assist Contractor in estimating the amount of lime that could be needed to neutralize ponds. The table includes acidity and the estimated volume of water which existed at the time of those investigations and needs to be discharged.

B. The table also presents the expected number of first and second round composite samples for the water bodies at the site. Further rounds of composite samples may be necessary if satisfactory discharge parameters are not achieved after initial treatment and testing or if conditions change during discharge.

C. The information in the table is provided for Contractor's use. Actual field conditions at time of construction are subject to variation depending upon rainfall events and other causes. While lime used in accordance with this Section will be paid for, all sampling, testing, and discharge of all water shall be included in the lump sum bid for Impoundment Discharge.

3.8 MEASUREMENT AND PAYMENT

The construction cost of all work included in this Section of the Construction Specifications shall be included in Contractor's unit prices set forth in the Proposal and Schedule of Prices *(Document C)* for the work items described below. The unit price for each of these items shall include its pro rata share of overhead so that the sum of the products obtained by multiplying the unit prices so set forth by the amount of work actually constructed, measured as described herein, shall constitute full payment to Contractor for performance of the work included in this SECTION of the Construction Specifications or on the Plans.

Measurement and payment for each work item in this SECTION shall be in accordance with the following:

A. *Hydrated Lime:* This unit price shall include all costs for liming materials, application, and circulation. Lime neutralization treatment required for acid water which has been allowed by Contractor to accumulate in depressions caused by Contractor's work, or in impoundment basins previously treated and discharged off-site shall be performed by Contractor at no cost to Division. The payment quantity for lime neutralization of acid water shall be the actual number of tons of hydrated lime incorporated into the acid water as validated by weigh tickets furnished to Engineer during neutralization operations.

B. *Impoundment Discharge:* Contractor shall be paid at the lump sum price for this item. This amount shall be full compensation for preparing and implementing the neutralization and dewatering plan, for all water sampling and testing, and for discharge of all impoundments. Contractor will only be reimbursed once for discharge of all impoundments. Any further impoundment discharge required resulting from groundwater seeps, precipitation, or other reasons shall be incidental. Any resulting water sampling/testing or further acid water treatment, including lime, shall be incidental. The lump sum price for this work item shall include full payment for all work as required to complete all impoundment discharge in accordance with the requirements of this SECTION.

C. *Summary*: Proposal Bid Items applicable to work covered by this SECTION are as follows:

Description	Unit
Hydrated Lime	Ton
Impoundment Discharge	Lump Sum

END OF SECTION 02110

INDEX

SECTION 02120 – SEDIMENT AND EROSION CONTROL

PART 1 - GENERAL

1.1 DESCRIPTION
1.2 QUALITY ASSURANCE
1.3 JOB CONDITIONS
1.4 SUBMITTALS
1.5 SCHEDULING

PART 2 - PRODUCTS

2.1 MATERIALS

PART 3 - EXECUTION

3.1 SWPPP PREPARATION
3.2 SWPPP MANAGEMENT
3.3 INSTALLATION OF SEDIMENT AND EROSION CONTROL MEASURES
3.4 MEASUREMENT AND PAYMENT

PART 1 - GENERAL

1.1 DESCRIPTION

A. Work included

Work under this SECTION covers requirements for materials, tools, equipment and services necessary to install sediment and erosion control practices for this project. The work shall include, but is not necessarily limited to, completion of the following work:

1. Installation of sediment and erosion control structures
2. Repairs to sediment and erosion control measures
3. Replacement of damaged erosion control measures
4. Removal of sediment and erosion control structures

B. Construction sites where more than one (1) acre of land is disturbed or made bare are regulated by the National Pollutant Discharge Elimination System (NPDES) program. The purpose of these regulations is to reduce pollution to the nation's waterways. Coverage under the NPDES program for construction sites is obtained from the Iowa Department of Natural Resources (IDNR) through General Permit No. 2.

C. The Storm Water Pollution Prevention Plan (SWPPP) has been prepared by Engineer and is included in the Plans. Contractor shall follow this plan unless modifications are made by Engineer or Division during the course of construction. Contractor shall be responsible for any damages that arise due to failure of Contractor to properly implement the erosion control plan.

1.2 QUALITY ASSURANCE

A. Use adequate numbers of skilled workmen who are thoroughly trained and experienced in the necessary crafts and who are completely familiar with the specified requirements and the methods needed for proper performance of the work of this SECTION.

B. In addition to complying with requirements of governmental agencies having jurisdiction, comply with the directives of Engineer and Division. Engineer or Division may request additional control methods to be implemented by Contractor.

C. The Storm Water Pollution Prevention Plan (SWPPP) for this project has been prepared by Engineer. Inspections of the erosion and sediment control measures will be performed by Engineer or Division on a weekly basis and after each rain event that exceeds one-half (1/2) inch. Modifications, repairs, or replacement of erosion control features that are deemed necessary will be brought to the attention of Contractor. Contractor shall incorporate these modifications, repairs, and replacements as soon as practical.

D. In the event of conflict between the SWPPP and the requirements with water pollution control laws, rules, and regulations of other federal, state, and local agencies, the more restrictive laws, rules, or regulations will apply.

1.3 JOB CONDITIONS

A. Abandoned mine land sites typically do not contain very good if any vegetative cover material and are highly susceptible to erosion. Contractor shall take care while grading the site to reduce the amount of sedimentation.

B. Wetlands, ponds, and streams are often located within and adjacent to abandoned mine land sites. Extra care shall be exercised to protect these features from sedimentation where these features are to remain in place.

C. Contractor shall protect all existing underground utilities, including any private tiles.

1.4 SUBMITTALS

A. Contractor shall be a co-permittee with Division for the IDNR NPDES General Permit No. 2 for this site. The permit fees, public notice, and permit submittal will be completed and paid for by Division.

B. The Contractor shall sign the SWPPP as prepared by the Engineer.

B. Contractor shall submit to Engineer documentation that various materials used for erosion and sediment control meet the requirements of the specifications.

1.5 SCHEDULING

A. Contractor shall sequence his work to minimize erosion of the site and implement the sediment and erosion control measures as outlined in the SWPPP. No grading work will be allowed until the appropriate control measures are in place.

B. When rain events cause necessary repairs or replacement to sediment and erosion control practices as determined by the inspection completed by Engineer or Division, Contractor shall implement the requested work as soon as practically possible.

PART 2 - PRODUCTS

2.1 MATERIALS

A. Erosion Control Mulch

1. Conventional Mulch - Materials shall consist of wheat, oats, rye, hay, grass cut from native grasses or other plants approved in writing by Division, that is of air dry straw that has been properly cured and harvested. Mulch harvested after a killing frost or during dormant periods will not be acceptable. Mulch shall not be rotted, brittle, moldy, caked or otherwise degraded. Mulch shall generally be free of noxious weeds as published by the local County Weed Commissioner.

2. Other types of mulch, such as hydromulch, can also be used but is subject to the approval of Engineer.

B. Compost Blankets

1. Compost used for blankets shall be derived from a well-decomposed source of organic matter, produced using an aerobic composting process, meeting Code of Federal Regulations (CFR) 503 for time, temperature, and heavy metal concentrations. The compost shall have no visible admixture of refuse or other physical contaminants, nor any material toxic to plant growth. The compost shall be certified by the U.S. Composting Council's Seal of Testing Assurance (STA) program and conform to the chemical, physical, and biological parameters of AASHTO MP 10-03, with the following additional requirements:

   a. Follow U.S. Composting Council's TMECC guidelines for all testing.

   b. Organic Matter Content: 30% minimum.

   c. pH: between 6.0 and 8.0.

d. Maturity (growth screening): Minimum 90% emergence for all compost to be vegetated.

e. Particle Size:

Sieve Size	Percent Passing*
2”	100
1”	90-100
3/4”	65-100
3/8”	0-75
*6 inch maximum particle length.	

2. A biodegradable, organic binding agent or polyacrylamide can be mixed, or injected into the compost as it is placed provided it is not detrimental to the establishment of vegetation. The binding agent shall be applied at the rate recommended by the manufacturer.

C. Temporary Erosion Control Seeding

1. Fertilizer consisting of nitrogen (N).

2. Seed consisting of the following mix depending upon the time of year. All seed rates shall be based on pure live seed as discussed in SECTION 02700.

Common Name	Application Rate (lbs/acre)	Application Dates
SPRING AND FALL		March 1-May 20 and August 15 - September 30
Oats	65	
Grain Rye	25	
Red Clover	5	
Timothy	5	
SUMMER		May 21 –August 14
Oats	95	
Grain Rye	35	
Red Clover	5	
Timothy	5	

D. Silt Fences

1. Fabric used for silt fences shall meet the requirements of IDOT 4196.01.

2. Posts used for silt fences shall be steel T-posts with a minimum length of four (4) feet weighing at least one and one-quarter (1-1/4) pounds per foot, exclusive of the anchor plate. Painted posts are not required.

3. Wire or plastic ties with a minimum tensile strength of fifty (50) pounds shall be used for fasteners.

E. Check Dams

1. Check dams using silt fence shall comply with details of 2.1.C above

2. Check dams using RECP shall be Type 4 with a minimum four (4) foot width and shall comply with details of 2.1.I below.

3. Triangular foam check dams shall have a height of eight (8) to ten (10) inches with a base width of sixteen (16) to twenty (20) inches and a length of seven (7) feet. The inner support material shall be urethane foam and the outer cover shall be woven geotextile shaped to fit around the inner support material with the bottom edge extending two (2) to three (3) feet beyond the bottom edge.

4. Rock check dams shall be composed of Erosion Stone conforming to IDOT 4130, Gradation No. 34 encapsulated in engineering fabric meeting the requirements of IDOT 4196.01C.

F. Filter Berms and Socks

1. Materials used for filter berms and in filter socks and shall be derived from wood, bark, or other non-toxic vegetative feed stock. The material shall not contain any material that is toxic to plant growth. The target flow rate of the in-place material is ten (10) gallons per minute per linear foot. The material shall meet the following particle sizes:

Sieve Size	Percent Passing
2 inch	100
1 inch	90-100
3/8 inch	0-30

2. Where required for slope and sediment control applications, the filter sock shall consist of a continuous, tubular, knitted, mesh netting with three-eighth (3/8) inch openings constructed of five (5) millimeter thickness and photodegradable high density polyethylene (HDPE).

3. Filter socks will be supported by one (1) inch by two (2) inch hard wood stakes or stakes of equivalent strength.

G. Wattles

1. Netting for wattles shall be degradable with an open weave having a nominal diameter of nine (9) inches or as specified.

2. Fill material shall consist of straw, wood excelsior, coir, or other natural materials approved by Engineer.

3. Stakes shall be one (1) inch by one (1) inch wood stakes or stakes of equivalent strength.

H. Temporary Rolled Erosion Control Products (RECP)

Use temporary rolled erosion control products that are classified and have material properties according to the Erosion Control Technology Council's (ECTC) guidelines as follows:

1. RECP Type 1 (Ultra Short-Term): Functional longevity of three months or less and classified as follows:

a. RECP Type 1.A: Mulch control net, consisting of a photodegradable synthetic mesh or woven biodegradable natural fiber netting.

b. RECP Type 1.B: Netless rolled erosion control blankets, consisting of natural and/or polymer fibers, mechanically interlocked and/or chemically adhered together to form a RECP.

c. RECP Type 1.C: Single-net erosion control blankets and open weave textiles, consisting of processed degradable natural and/or polymer fibers, mechanically bound together by a single rapidly-degrading, synthetic or natural fiber netting, or an open weave textile of processed rapidly-degrading natural or polymer yarns or twines woven into a continuous matrix.

d. RECP Type 1.D: Double-net erosion control blankets, consisting of processed degradable natural and/or polymer fibers, mechanically bound together between two rapidly-degrading, synthetic or natural fiber nettings.

2. RECP Type 2 (Short-Term): Functional longevity between three and 12 months and classified as follows:

a. RECP Type 2.A: Mulch control net, consisting of a photodegradable synthetic mesh or woven biodegradable natural fiber netting.

b. RECP Type 2.B: Netless rolled erosion control blankets, consisting of natural and/or polymer fibers, mechanically interlocked and/or chemically adhered together to form a RECP.

c. RECP Type 2.C: Single-net erosion control blankets and open weave textiles, consisting of an erosion control blanket composed of processed degradable natural or polymer fibers, mechanically bound together by a single degradable synthetic or natural fiber netting to form a continuous matrix, or an open weave textile composed of processed degradable natural or polymer yarns or twines woven into a continuous matrix.

d. RECP Type 2.D: Double-net erosion control blanket, consisting of processed degradable natural and/or polymer fibers, mechanically bound together between two degradable synthetic or natural fiber nettings.

3. RECP Type 3 (Extended Term): Functional longevity between 12 and 24 months and classified as follows:

a. RECP Type 3.A: Mulch control nets, consisting of a slow-degrading synthetic mesh or woven natural fiber netting.

b. RECP Type 3.B: Erosion control blankets and open weave textiles, consisting of processed slow-degrading natural or polymer fibers, mechanically bound together between two slow-degrading synthetic or natural fiber nettings to form a continuous matrix, or an open weave textile composed of processed slow-degrading natural or polymer yarns or twines woven into a continuous matrix.

4. RECP Type 4 (Long Term): Functional longevity of 36 months and classified as follows: Erosion control blankets and open weave textiles, consisting of processed slow-degrading natural or polymer fibers, mechanically bound together between two slow degrading synthetic or natural fiber nettings to form a continuous matrix, or an open weave textile composed of processed slow-degrading natural or polymer yarns or twines woven into a continuous matrix.

5. Properties and Performance:

Testing performed according to the ECTC's Testing Procedures for Rolled Erosion Control Products. Verify manufacturer's test results by independent testing.

Material properties meeting the Erosion Control Technology Council's (ECTC) Standard Specifications for Rolled Erosion Control Products as follows:

Classification	Slope Application	Channel Application	Min. Tensile Strength
	Max. Grade*	Permissible Shear Stress	
RECP Type 1.A	5:1 (H:V)	0.25 lb/ft^2	5 lb/ft
RECP Type 1.B	4:1 (H:V)	0.50 lb/ft^2	5 lb/ft
RECP Type 1.C	3:1 (H:V)	1.50 lb/ft^2	50 lb/ft
RECP Type 1.D	2:1 (H:V)	1.75 lb/ft^2	75 lb/ft
RECP Type 2.A	5:1 (H:V)	0.25 lb/ft^2	5 lb/ft
RECP Type 2.B	4:1 (H:V)	0.50 lb/ft^2	5 lb/ft
RECP Type 2.C	3:1 (H:V)	1.50 lb/ft^2	50 lb/ft
RECP Type 2.D	2:1 (H:V)	1.75 lb/ft^2	75 lb/ft
RECP Type 3.A	5:1 (H:V)	0.25 lb/ft^2	25 lb/ft
RECP Type 3.B	1.5:1 (H:V)	2.00 lb/ft^2	100 lb/ft
RECP Type 4	1:1 (H:V)	2.25 lb/ft^2	125 lb/ft
*Product tested according to ECTC Test Method No. 2 and meeting the ECTC Standard Specifications for "C" factor.			

6. RECP Anchors shall be stakes or staples as recommended by manufacturer, with a minimum length of 6 inches.

I. Turf Reinforcing Mats (TRM)

1. TRM Type 1: Use a TRM that is constructed of a web of mechanically or melt-bonded polymer netting, or monofilaments fibers that are entangled to form a strong and dimensionally stable mat. Bonding methods include polymer welding, thermal or polymer fusion, or the placement of synthetic fibers between two high-strength, biaxially-oriented nets, mechanically bound by parallel stitching with polyolefin thread. Products may contain a degradable component.

2. TRM Type 2: Use a TRM that is constructed of a web of mechanically or melt-bonded polymer netting, monofilaments, or fibers that are entangled or woven to form a strong and dimensionally stable mat. Non-woven bonding methods include polymer welding, thermal or polymer fusion, or the placement of fibers between two high-strength, biaxially oriented nets, mechanically bound by parallel stitching with polyolefin thread. Use only

components that are 100% synthetic and resistant to biological, chemical, and ultraviolet degradation.

3. TRM Type 3: Use a high performance/survivability TRM that is composed of monofilament yarns woven into a resilient uniform configuration. Use a mat that has a matrix that exhibits very high interlock and reinforcement capacities with both soil and root systems and demonstrate a high tensile modulus. TRMs manufactured from discontinuous or loosely held together by stitched or glued, netting, or composites are not allowed in this category. Use only components that are 100% synthetic and resistant to biological, chemical, and ultraviolet degradation. Use this category when field conditions exist with high loading and/or high survivability requirements. These requirements consist of maintenance, structural backfills protecting critical structures, potential traffic areas, abrasion, higher factors of safety, and/or general durability concerns.

4. TRMs shall meet the minimum material and performance requirements contained in the following table:

Property[1]		Test Method	Type 1	Type 2	Type 3
Material	Thickness	ASTM D6525	0.25 in	0.25 in	0.25 in
	Tensile Strength[2]	ASTM D6818	125 lb/ft	1,500 lb/ft	3,000 lb/ft
	UV Resistance[3]	ASTM D4355	80% @ 500 hrs	80% @ 1,000 hrs	90% @ 3,000 hrs
Performance	Maximum Shear Stress (Channel Applications)	ASTM D4640	8 lb/ft^2	10 lb/ft^2	12 lb/ft^2
	Maximum Slope Gradient (Slope Applications)	N/A	1:1 (H:V) or flatter	1:1 (H:V) or flatter	1:1 (H:V) or greater

1. For TRMs containing degradable components, all values must be obtained on the non-degradable portion of the matting.
2. Minimum Average Roll Values, machine direction only. Tensile strength from ASTM D5035 may be substituted upon approval.
3. Tensile strength of structural components retained after exposure.
4. Minimum shear stress that fully-vegetated TRM can sustain without physical damage or excess erosion (0.5 in soil loss) during a 30-minute flow event in large scale testing. Acceptable large scale testing protocol includes ASTM D6460 or independent testing conducted by the Texas Transportation Institute, Colorado State University, Utah State University, or other approved testing facility.

J. Sediment Basin Outlet Structures

1. The base, riser, and outlet pipe shall conform to the details as shown on the plans. The riser shall include an anti-vortex device and the outlet pipe shall include anti-seep collars as shown.

PART 3 - EXECUTION

3.1 SWPPP PREPARATION

A. The Erosion Control Plan for this project prepared by Engineer has been included in the Plans. The completed SWPPP will be provided to Contractor prior to initiation of construction and will be based on the Erosion Control Plan.

B. Contractor shall be co-permittee with Division on the IDNR NPDES General Permit No. 2 that shall be completed by Division.

3.2 SWPPP MANAGEMENT

A. Contractor and all subcontractors are required to sign the certification statement one (1) week prior to start of construction. The signed copies shall be kept with the SWPPP in the contractor's field office.

B. Contractor shall be responsible for implementation of the various control measures during construction within the project limits as defined in the SWPPP.

C. Contractor shall properly manage all hazardous materials (i.e. fuel, oil, concrete wash out, etc.) brought to the site to conform to all at his own expense.

D. Engineer and Division will complete the required inspections and will inform Contractor of modifications and additions that are needed. Contractor shall complete these modifications and additions as soon as practical.

E. Contractor may propose alternative measures than those specified by Engineer but shall receive approval from Division or Engineer prior to installation of these alternate measures.

F. Contractor shall maintain access to the site at all times during construction.

G. Division will file the Notice of Discontinuation after final stabilization is achieved.

3.3 INSTALLATION OF SEDIMENT AND EROSION CONTROL MEASURES

A. Surface Roughening

1. Directional Tracking: Operate tracked equipment up and down slopes that are less steep than three to one horizontal to vertical (3H:1V) to create ridges that are perpendicular to the slope.

2. Grooving/Furrowing: Use rippers, disks, harrows, chisel plows, or other equipment capable of operating on the slope to create grooves that are about three (3) inches deep and spaced a maximum of fifteen (15) inches apart. Grooves must be made along the contour and perpendicular to the slope.

B. Erosion Control Mulching

1. Conventional: Uniformly distribute mulch over the required area at a rate of two (2) tons per acre and work the mulch into the soil with a mulch tucker designed to anchor the mulch into soil by means of dull blades or disks.

2. Other types of mulching, if approved by Engineer, will be at the determined rates of application with appropriate equipment.

C. Compost Blankets

1. Loosen the ground to a minimum depth of one (1) inch and evenly apply the compost to the specified depth.

2. All concentrated flows shall be diverted away from the slope.

3. No heavy equipment shall be operated over the compost blanket throughout the required period of protection.

D. Temporary Erosion Control Seeding

1. Till soil to a minimum depth of five (5) inches with a disk, harrow, or field cultivator.

2. Apply Nitrogen (N) fertilizer to all seeded areas at a rate of fifty (50) pounds per acre.

3. On areas accessible to field machinery, sow seed with an endgate cyclone seeder. Areas that are not accessible shall use hand-operated cyclone seeding methods.

4. Cover the seed and fertilizer lightly by tiling the seeded area with a disk, rigid harrow, spring tooth harrow, or field cultivator.

E. Temporary Earth Diversion Structures

1. Construct the temporary earth diversion structure at the location and with the dimensions shown on the plans. Adequately compact fill to prevent failures and seepage. Failures due to inadequate compaction shall be repaired by Contractor at no cost to Division.

2. Ensure positive drainage along the diversion ditch to the designated outlet area.

3. Apply temporary erosion control seeding if structures are specified to be vegetated.

F. Silt Fences

1. Install silt fences along the specified contour and to the dimension shown on the erosion control plan or as directed by Engineer. The ends of continuous run silt fences shall be turned uphill with a J-hook to prevent runoff from flowing around the end when the water behind the fence ponds to a level even with the top of the fence.

2. Install silt fence fabric with a mechanical soil slicing machine that creates a slit in the ground while simultaneously installing the fabric. The trenching method may be used when the slicing method cannot be used and is subject to approval by Engineer. The silt fence fabric shall be installed such that twelve (12) inches is installed at least six (6) inches below the ground line (folding is allowed). After the fabric is installed, the ground shall be compacted on each side by driving over the area with rubber tired equipment or by other means as necessary to adequately anchor the material in the ground to prevent pullout and water flow under the fence.

3. Steel post supports shall be placed at a maximum spacing of eight (8) feet or as directed by Engineer. The steel posts shall be installed with a minimum embedment depth of twenty (20) inches. Fabric shall be tied to the steel posts at least four (4) evenly spaced locations using metal ties or plastic ties that have ultraviolet protection.

4. Non-functioning silt fences that allow flow underneath or that are damaged due to improper installation shall be repaired or replaced by Contractor at no cost to Division.

5. Silt fences shall be cleaned out when the accumulated sediment reaches a level of one-half the height of the silt fence or when the silt fence becomes clogged with sediment and no longer allows runoff to flow through. Silt fences shall be replaced when necessary.

6. Silt fences shall be removed at the appropriate time by removing the stakes, ties, and fabric from the site or burying material in an approved location and manner. The accumulated sediment shall be spread and disturbed in surrounding areas and smoothed to match finished grade and to ensure proper drainage.

G. Check Dams

1. Install check dams as shown on the plans or as recommended by the manufacturer.

2. Clean out check dams as directed by Engineer when they become non-functioning by sediment accumulation.

3. Remove check dam as directed by Engineer after site is stabilized. All accumulated sediment and disturbed areas shall be regraded and spread as needed to match finished grade and ensure proper drainage.

H. Filter Berms

1. Filter berms shall be constructed to the dimensions and along the contour as shown on the plans or as directed by Engineer.

2. The ends of filter berms shall be turned uphill to prevent runoff from flowing around the ends.

3. Apply temporary erosion control evenly to the surface if the berm is specified to be vegetated.

4. Filter berm shall be cleaned out when sediment accumulation reaches one-half of the height of the berm or as directed by Engineer.

I. Filter Socks

1. Filter socks shall be filled with the appropriate filter material pneumatically to the size and length indicated on the plans or as directed by Engineer.

2. Filter socks shall be placed along the contour as indicated on the plans or as directed by Engineer. The ends of the each filter sock shall be turned uphill to create a J-hook to prevent runoff from flowing around the ends when water ponds up to a level even with the top of the sock.

3. Additional filter material or soil shall be placed on the uphill side of the filter sock between the filter sock and the ground.

4. Drive support stakes into the ground on the downhill side of the filter socks at a maximum spacing of ten (10) feet. Place additional stakes as needed to secure the sock and prevent movement.

5. Non-functioning filter socks that allow flow underneath or socks that are damaged due to improper installation shall be repaired or replaced by Contractor at no cost to Division.

6. Filter socks shall be cleaned out when the accumulated sediment reaches a level of one-half the height of the sock or when the sock becomes clogged with sediment and no longer allows runoff to flow through.

7. Filter socks shall be removed at the appropriate time by slicing the sock longitudinally and removing the mesh and staking materials. The filter material and accumulated sediment shall be spread to match finished grade and ensure proper drainage.

J. Wattles

1. Construct a shallow trench that is two (2) to four (4) inches deep that matches the width and the contour of the wattle. Place the wattle and compact excavated soil against the wattle on the uphill side.

2. Drive stakes through the center of the wattle at a maximum spacing of four (4) feet and as needed to secure the wattle and prevent movement. Extra staking is needed at butted ends to prevent leakage. Do not overlap wattles.

3. Non-functioning wattles that allow flow underneath or wattles that are damaged due to improper installation shall be repaired or replaced by Contractor at no cost to Division.

4. Wattles shall be cleaned out when the accumulated sediment reaches a level of one-half the height of the wattle or when the wattle becomes clogged with sediment and no longer allows runoff to flow through.

5. Wattles shall be removed at the appropriate time by slicing the wattle and removing the mesh and staking materials. The filler material and accumulated sediment shall be spread to match finished grade and ensure proper drainage.

K. Temporary Rolled Erosion Control Products (RECPs)

1. Install all RECPs according to the manufacturer's published installation recommendations along with the following minimum requirements.

2. Grade and smooth surface. Remove all rocks, clods, vegetation, or other obstructions that will prevent direct contact between the RECP and the soil surface.

3. When specified, prepare seedbed and place seed and fertilizer according to Section 02700.

4. Slope Application: Install anchor trench along at the top of the slope. Unroll the RECP down and horizontally across the slope. Place consecutive blankets down the slope end over end, shingle style. Overlap rolls a minimum of three (3) inches and install anchors at a maximum spacing of eighteen (18) inches along all the overlaps. Backfill and compact trench and place additional seed as required.
5. Channel Application: Install RECP As shown on the details shown on the plans.

L. Turf Reinforcement Mats (TRMs)

1. Install TRMs according to the published installation literature for the product specified and for the appropriate application.

2. Depending upon the sequence and timing of construction, it may be necessary to delay installation of TRMs to correspond to dates when permanent seeding can take place in the spring and fall seeding periods.

M. Sediment Basin Outlet Structures

1. Concrete Base: Construct concrete base and anchor riser section as shown on the plans.

2. Dewatering Device: Drill holes in riser section with the number, diameter and configuration as shown on the plans. Wrap the perforated section of the riser pipe with metal hardware cloth.

3. Riser and Barrel: Place the specified corrugated metal pipe and properly backfill as needed with compacted lifts of soil. The anti-vortex and anti-seep collars shall also be properly placed where shown on the plans.

4. Repairs required to the sediment basin or outlet structure due to improper installation shall be repaired by Contractor at no cost to Division.

3.4 MEASUREMENT AND PAYMENT

The construction cost of all work included in this SECTION of the Construction Specifications shall be included in Contractor's unit prices set forth in the Proposal and Schedule of Prices *(Document C)* for the work items described below. The unit price for each of these items shall include its pro rata share of overhead so that the sum of the products obtained by multiplying the unit prices so set forth by the amount of the work actually constructed, measured as described herein, shall constitute full payment to Contractor for performance of the work included in this SECTION. The unit price shall include all labor, materials, and equipment necessary for proper installation of the various controls.

If erosion and sediment control measures are properly installed by Contractor and storm events cause failure or reduces the effectiveness of these measures, replacement shall be completed as directed by Engineer and will be paid for by Division to Contractor as defined below.

If temporary erosion and pollution control measures are required due to Contractor’s negligence, carelessness, or failure to install permanent controls as part of his work as scheduled and are deemed necessary by Engineer or Division, the measure shall be completed by Contractor at no cost to Division.

In case of repeated failures on part of Contractor to control erosion, pollution, and/or siltation, Division reserves the right to employ outside assistance to provide the necessary corrective measures. Such incurred direct costs, plus Engineering costs, will be at Contractor’s own expense with the appropriate deduction taken from future pay requests.

Measurement and payment for each work item in this SECTION shall be in accordance with the following:

A. *Surface Roughening:* Payment for surface roughening performed as directed by Engineer will be measured and paid for by the contract unit price per acre. Areas shall be jointly measured by Engineer and Contractor.

B. *Erosion Control Mulching:* Payment for mulching will be measured and paid for at the contract unit price per acre. Mulch placed outside designated areas will not be measure for payment. Areas shall be measured jointly by Engineer and Contractor.

C. *Compost Blankets*: Payment for the cost of placing compost blankets will be measured and paid for by the contract unit price of each square foot for each thickness of blanket specified and shall include preparing the subgrade. Compost blankets placed outside specified areas will not be measured for payments. Measurements will be taken jointly by Engineer and Contractor.

D. *Temporary Erosion Control Seeding:* Payment for placement of temporary seeding will be measured and paid for by the acre. The unit contract price shall include preparing the subgrade,

placement of fertilizer and seed, and final cultivating. The area for payment will be measured jointly by Engineer and Contractor.

E. *Temporary Earth Diversion Structures:* Payment for installation and removal of temporary earth diversion structures will be measured and paid for by the linear foot for each type and size of diversion structure. Payment will be jointly measured by contractor and Engineer. Full payment for this item will not be made until removal is complete. The unit price shall include all labor and equipment necessary.

F. *Silt Fences:* Payment for installation of silt fence will be measured and paid for at the contract unit price per linear foot of silt fence as measured jointly by the contractor and Engineer. The unit cost shall include all labor, equipment, and materials for proper installation. Payment will be made for removal of silt fence, either at the end of the project after seeding is established or if replacement silt fence is required during construction. Payment will be made based on the contractor's unit price and will match the linear feet of silt fence installed. The removal price for silt fence shall include removal and disposal of stakes, fabric, and ties. The removal price shall also include restoring the disturbed area to finished grade and removal or distribution of the accumulated sediment.

G. *Check Dams:* Payment for temporary check dams will be measured and paid for at the contract unit price per linear foot of each size and check dam specified. The length of the check dams will be measured jointly by Engineer and Contractor. A separate unit price shall be provided for removal when required.

Permanent check dams made from riprap will be paid for to the nearest one-tenth (0.1) of ton of material placed provided the dimensions of the check dam are similar to that shown on the plans or otherwise approved. Filter fabric used beneath the riprap will not be measured for payment and shall be considered incidental. The unit cost shall include all labor, equipment, and material costs that are necessary. Excavation costs and distribution of the soil materials are considered incidental and shall not be measured separately for payment.

H. *Filter Berms:* Payment for filter berms will be measured and paid for at the contract unit price by the linear foot of each size specified. Measurements will be taken longitudinally along the top of the berm and will be measured jointly by Contractor and Engineer. Filter berms that are needed to replace existing filter berms because of sediment accumulation will also be measured for payment.

I. *Filter Socks:* Payment for filter socks will be measured and paid for at the contract unit price by the linear foot of each diameter specified. Measurements will be taken jointly by Contractor and Engineer. Filter socks that are needed to replace existing filter socks because of sediment accumulation will also be measured for payment. Removal of filter sock will also be paid for at contractor's unit price and shall include removal and disposal of sock and stakes. The removal cost shall also include distribution of the accumulated sediment and filter material.

J. *Wattles:* Payment for wattles will be measured and paid for at the contract unit price per linear foot. Any excavation required for placement and the staking of the wattle shall be considered incidental to the installation costs. A separate contract unit price shall be provided for removal. The length of wattle for payment of installation and removal shall be the same and measured jointly by Engineer and Contractor.

K. *Temporary Rolled Erosion Control Products (RECPs):* Payment for temporary RECPs will be measure and paid for at the contract unit price per square yard of area covered for each type used. Overlaps will not be measured for payment. Staples, anchors, or other products needed for proper installation are considered incidental. Areas shall be jointly measured by Contractor and Engineer.

L. *Turf Reinforcing Mats (TRMs):* Payment for TRMs will be measure and paid for at the contract unit price per square yard of area covered for each type used. Overlaps will not be measured for

payment. Staples, anchors, or other products needed for proper installation are considered incidental. Areas shall be jointly measured by Contractor and Engineer.

M. *Sediment Basin Outlet Structures:* Measurement and payment will be made for each sediment basin outlet structure installed by size. The contract unit price shall include all materials, labor, and equipment required to construct the outlet structure as specified and shown on the plans. The unit price for installation shall include the concrete base, anti-vortex device, outlet pipe, and any anti-seep collars required. Earthwork required for construction of the sediment basin will be measured and paid as part of the general excavation quantities.

Measurement and payment will also be made for each sediment basin cleanout required during construction. Contract unit price includes dewatering, and removal and disposal of accumulated sediment. The measurement and payment will also be made for each sediment basin outlet structure properly removed. Contract unit price includes dewatering and removal of sediment accumulated at the end of the project, disposal of the outlet structure, concrete base, and emergency spillway. Earthwork required to restore the sediment basin and restoration of the area to finished grade will be measured and paid for separately.

N. *Summary:* Proposal Bid Items applicable to work covered by this SECTION are as follows:

Description	Unit
Surface Roughening	Acre
Erosion Control Mulching	Acre
Compost Blankets	Square Foot
Temporary Erosion Control Seeding	Acre
Temporary Earth Diversion Structures	Linear Foot
Silt Fences – Installation	Linear Foot
Silt Fences – Removal	Linear Foot
Check Dams – Temporary	Linear Foot
Check Dams – Permanent	Ton
Filter Berms	Linear Foot
Filter Socks – Installation	Linear Foot
Filter Socks – Removal	Linear Foot
Wattles – Installation	Linear Foot
Wattles – Removal	Linear Foot
Temporary Rolled Erosion Control Products	Square Yard
Turf Reinforcing Mats	Square Yard
Sediment Basin Outlet Structures – Installation	Lump Sum
Sediment Basin Outlet Structures – Cleanout	Lump Sum
Sediment Basin Outlet Structures – Removal	Lump Sum

END OF SECTION 02120

INDEX

SECTION 02120 – SEDIMENT AND EROSION CONTROL

PART 1 - GENERAL

1.1 DESCRIPTION
1.2 QUALITY ASSURANCE
1.3 JOB CONDITIONS
1.4 SUBMITTALS
1.5 SCHEDULING

PART 2 - PRODUCTS

2.1 MATERIALS

PART 3 - EXECUTION

3.1 SWPPP PREPARATION
3.2 SWPPP MANAGEMENT
3.3 INSTALLATION OF SEDIMENT AND EROSION CONTROL MEASURES
3.4 MEASUREMENT AND PAYMENT

PART 1 - GENERAL

1.1 DESCRIPTION

A. Work included

Work under this SECTION covers requirements for materials, tools, equipment and services necessary to install sediment and erosion control practices for this project. The work shall include, but is not necessarily limited to, completion of the following work:

1. Installation of sediment and erosion control structures
2. Repairs to sediment and erosion control measures
3. Replacement of damaged erosion control measures
4. Removal of sediment and erosion control structures

B. Construction sites where more than one (1) acre of land is disturbed or made bare are regulated by the National Pollutant Discharge Elimination System (NPDES) program. The purpose of these regulations is to reduce pollution to the nation's waterways. Coverage under the NPDES program for construction sites is obtained from the Iowa Department of Natural Resources (IDNR) through General Permit No. 2.

C. The Storm Water Pollution Prevention Plan (SWPPP) has been prepared by Engineer and is included in the Plans. Contractor shall follow this plan unless modifications are made by Engineer or Division during the course of construction. Contractor shall be responsible for any damages that arise due to failure of Contractor to properly implement the erosion control plan.

1.2 QUALITY ASSURANCE

A. Use adequate numbers of skilled workmen who are thoroughly trained and experienced in the necessary crafts and who are completely familiar with the specified requirements and the methods needed for proper performance of the work of this SECTION.

B. In addition to complying with requirements of governmental agencies having jurisdiction, comply with the directives of Engineer and Division. Engineer or Division may request additional control methods to be implemented by Contractor.

C. The Storm Water Pollution Prevention Plan (SWPPP) for this project has been prepared by Engineer. Inspections of the erosion and sediment control measures will be performed by Engineer or Division on a weekly basis and after each rain event that exceeds one-half (1/2) inch. Modifications, repairs, or replacement of erosion control features that are deemed necessary will be brought to the attention of Contractor. Contractor shall incorporate these modifications, repairs, and replacements as soon as practical.

D. In the event of conflict between the SWPPP and the requirements with water pollution control laws, rules, and regulations of other federal, state, and local agencies, the more restrictive laws, rules, or regulations will apply.

1.3 JOB CONDITIONS

A. Abandoned mine land sites typically do not contain very good if any vegetative cover material and are highly susceptible to erosion. Contractor shall take care while grading the site to reduce the amount of sedimentation.

B. Wetlands, ponds, and streams are often located within and adjacent to abandoned mine land sites. Extra care shall be exercised to protect these features from sedimentation where these features are to remain in place.

C. Contractor shall protect all existing underground utilities, including any private tiles.

1.4 SUBMITTALS

A. Contractor shall be a co-permittee with Division for the IDNR NPDES General Permit No. 2 for this site. The permit fees, public notice, and permit submittal will be completed and paid for by Division.

B. The Contractor shall sign the SWPPP as prepared by the Engineer.

B. Contractor shall submit to Engineer documentation that various materials used for erosion and sediment control meet the requirements of the specifications.

1.5 SCHEDULING

A. Contractor shall sequence his work to minimize erosion of the site and implement the sediment and erosion control measures as outlined in the SWPPP. No grading work will be allowed until the appropriate control measures are in place.

B. When rain events cause necessary repairs or replacement to sediment and erosion control practices as determined by the inspection completed by Engineer or Division, Contractor shall implement the requested work as soon as practically possible.

PART 2 - PRODUCTS

2.1 MATERIALS

A. Erosion Control Mulch

1. Conventional Mulch - Materials shall consist of wheat, oats, rye, hay, grass cut from native grasses or other plants approved in writing by Division, that is of air dry straw that has been properly cured and harvested. Mulch harvested after a killing frost or during dormant periods will not be acceptable. Mulch shall not be rotted, brittle, moldy, caked or otherwise degraded. Mulch shall generally be free of noxious weeds as published by the local County Weed Commissioner.

2. Other types of mulch, such as hydromulch, can also be used but is subject to the approval of Engineer.

B. Compost Blankets

1. Compost used for blankets shall be derived from a well-decomposed source of organic matter, produced using an aerobic composting process, meeting Code of Federal Regulations (CFR) 503 for time, temperature, and heavy metal concentrations. The compost shall have no visible admixture of refuse or other physical contaminants, nor any material toxic to plant growth. The compost shall be certified by the U.S. Composting Council's Seal of Testing Assurance (STA) program and conform to the chemical, physical, and biological parameters of AASHTO MP 10-03, with the following additional requirements:

   a. Follow U.S. Composting Council's TMECC guidelines for all testing.

   b. Organic Matter Content: 30% minimum.

   c. pH: between 6.0 and 8.0.

d. Maturity (growth screening): Minimum 90% emergence for all compost to be vegetated.

e. Particle Size:

Sieve Size	Percent Passing*
2”	100
1”	90-100
3/4”	65-100
3/8”	0-75
*6 inch maximum particle length.	

2. A biodegradable, organic binding agent or polyacrylamide can be mixed, or injected into the compost as it is placed provided it is not detrimental to the establishment of vegetation. The binding agent shall be applied at the rate recommended by the manufacturer.

C. Temporary Erosion Control Seeding

1. Fertilizer consisting of nitrogen (N).

2. Seed consisting of the following mix depending upon the time of year. All seed rates shall be based on pure live seed as discussed in SECTION 02700.

Common Name	Application Rate (lbs/acre)	Application Dates
SPRING AND FALL		March 1-May 20 and August 15 - September 30
Oats	65	
Grain Rye	25	
Red Clover	5	
Timothy	5	
SUMMER		May 21 –August 14
Oats	95	
Grain Rye	35	
Red Clover	5	
Timothy	5	

D. Silt Fences

1. Fabric used for silt fences shall meet the requirements of IDOT 4196.01.

2. Posts used for silt fences shall be steel T-posts with a minimum length of four (4) feet weighing at least one and one-quarter (1-1/4) pounds per foot, exclusive of the anchor plate. Painted posts are not required.

3. Wire or plastic ties with a minimum tensile strength of fifty (50) pounds shall be used for fasteners.

E. Check Dams

1. Check dams using silt fence shall comply with details of 2.1.C above

2. Check dams using RECP shall be Type 4 with a minimum four (4) foot width and shall comply with details of 2.1.I below.

3. Triangular foam check dams shall have a height of eight (8) to ten (10) inches with a base width of sixteen (16) to twenty (20) inches and a length of seven (7) feet. The inner support material shall be urethane foam and the outer cover shall be woven geotextile shaped to fit around the inner support material with the bottom edge extending two (2) to three (3) feet beyond the bottom edge.

4. Rock check dams shall be composed of Erosion Stone conforming to IDOT 4130, Gradation No. 34 encapsulated in engineering fabric meeting the requirements of IDOT 4196.01C.

F. Filter Berms and Socks

1. Materials used for filter berms and in filter socks and shall be derived from wood, bark, or other non-toxic vegetative feed stock. The material shall not contain any material that is toxic to plant growth. The target flow rate of the in-place material is ten (10) gallons per minute per linear foot. The material shall meet the following particle sizes:

Sieve Size	Percent Passing
2 inch	100
1 inch	90-100
3/8 inch	0-30

2. Where required for slope and sediment control applications, the filter sock shall consist of a continuous, tubular, knitted, mesh netting with three-eighth (3/8) inch openings constructed of five (5) millimeter thickness and photodegradable high density polyethylene (HDPE).

3. Filter socks will be supported by one (1) inch by two (2) inch hard wood stakes or stakes of equivalent strength.

G. Wattles

1. Netting for wattles shall be degradable with an open weave having a nominal diameter of nine (9) inches or as specified.

2. Fill material shall consist of straw, wood excelsior, coir, or other natural materials approved by Engineer.

3. Stakes shall be one (1) inch by one (1) inch wood stakes or stakes of equivalent strength.

H. Temporary Rolled Erosion Control Products (RECP)

Use temporary rolled erosion control products that are classified and have material properties according to the Erosion Control Technology Council's (ECTC) guidelines as follows:

1. RECP Type 1 (Ultra Short-Term): Functional longevity of three months or less and classified as follows:

a. RECP Type 1.A: Mulch control net, consisting of a photodegradable synthetic mesh or woven biodegradable natural fiber netting.

b. RECP Type 1.B: Netless rolled erosion control blankets, consisting of natural and/or polymer fibers, mechanically interlocked and/or chemically adhered together to form a RECP.

c. RECP Type 1.C: Single-net erosion control blankets and open weave textiles, consisting of processed degradable natural and/or polymer fibers, mechanically bound together by a single rapidly-degrading, synthetic or natural fiber netting, or an open weave textile of processed rapidly-degrading natural or polymer yarns or twines woven into a continuous matrix.

d. RECP Type 1.D: Double-net erosion control blankets, consisting of processed degradable natural and/or polymer fibers, mechanically bound together between two rapidly-degrading, synthetic or natural fiber nettings.

2. RECP Type 2 (Short-Term): Functional longevity between three and 12 months and classified as follows:

a. RECP Type 2.A: Mulch control net, consisting of a photodegradable synthetic mesh or woven biodegradable natural fiber netting.

b. RECP Type 2.B: Netless rolled erosion control blankets, consisting of natural and/or polymer fibers, mechanically interlocked and/or chemically adhered together to form a RECP.

c. RECP Type 2.C: Single-net erosion control blankets and open weave textiles, consisting of an erosion control blanket composed of processed degradable natural or polymer fibers, mechanically bound together by a single degradable synthetic or natural fiber netting to form a continuous matrix, or an open weave textile composed of processed degradable natural or polymer yarns or twines woven into a continuous matrix.

d. RECP Type 2.D: Double-net erosion control blanket, consisting of processed degradable natural and/or polymer fibers, mechanically bound together between two degradable synthetic or natural fiber nettings.

3. RECP Type 3 (Extended Term): Functional longevity between 12 and 24 months and classified as follows:

a. RECP Type 3.A: Mulch control nets, consisting of a slow-degrading synthetic mesh or woven natural fiber netting.

b. RECP Type 3.B: Erosion control blankets and open weave textiles, consisting of processed slow-degrading natural or polymer fibers, mechanically bound together between two slow-degrading synthetic or natural fiber nettings to form a continuous matrix, or an open weave textile composed of processed slow-degrading natural or polymer yarns or twines woven into a continuous matrix.

4. RECP Type 4 (Long Term): Functional longevity of 36 months and classified as follows: Erosion control blankets and open weave textiles, consisting of processed slow-degrading natural or polymer fibers, mechanically bound together between two slow degrading synthetic or natural fiber nettings to form a continuous matrix, or an open weave textile composed of processed slow-degrading natural or polymer yarns or twines woven into a continuous matrix.

5. Properties and Performance:

Testing performed according to the ECTC's Testing Procedures for Rolled Erosion Control Products. Verify manufacturer's test results by independent testing.

Material properties meeting the Erosion Control Technology Council's (ECTC) Standard Specifications for Rolled Erosion Control Products as follows:

Classification	Slope Application	Channel Application	Min. Tensile Strength
	Max. Grade*	Permissible Shear Stress	
RECP Type 1.A	5:1 (H:V)	0.25 lb/ft^2	5 lb/ft
RECP Type 1.B	4:1 (H:V)	0.50 lb/ft^2	5 lb/ft
RECP Type 1.C	3:1 (H:V)	1.50 lb/ft^2	50 lb/ft
RECP Type 1.D	2:1 (H:V)	1.75 lb/ft^2	75 lb/ft
RECP Type 2.A	5:1 (H:V)	0.25 lb/ft^2	5 lb/ft
RECP Type 2.B	4:1 (H:V)	0.50 lb/ft^2	5 lb/ft
RECP Type 2.C	3:1 (H:V)	1.50 lb/ft^2	50 lb/ft
RECP Type 2.D	2:1 (H:V)	1.75 lb/ft^2	75 lb/ft
RECP Type 3.A	5:1 (H:V)	0.25 lb/ft^2	25 lb/ft
RECP Type 3.B	1.5:1 (H:V)	2.00 lb/ft^2	100 lb/ft
RECP Type 4	1:1 (H:V)	2.25 lb/ft^2	125 lb/ft
*Product tested according to ECTC Test Method No. 2 and meeting the ECTC Standard Specifications for "C" factor.			

6. RECP Anchors shall be stakes or staples as recommended by manufacturer, with a minimum length of 6 inches.

I. Turf Reinforcing Mats (TRM)

1. TRM Type 1: Use a TRM that is constructed of a web of mechanically or melt-bonded polymer netting, or monofilaments fibers that are entangled to form a strong and dimensionally stable mat. Bonding methods include polymer welding, thermal or polymer fusion, or the placement of synthetic fibers between two high-strength, biaxially-oriented nets, mechanically bound by parallel stitching with polyolefin thread. Products may contain a degradable component.

2. TRM Type 2: Use a TRM that is constructed of a web of mechanically or melt-bonded polymer netting, monofilaments, or fibers that are entangled or woven to form a strong and dimensionally stable mat. Non-woven bonding methods include polymer welding, thermal or polymer fusion, or the placement of fibers between two high-strength, biaxially oriented nets, mechanically bound by parallel stitching with polyolefin thread. Use only

components that are 100% synthetic and resistant to biological, chemical, and ultraviolet degradation.

3. TRM Type 3: Use a high performance/survivability TRM that is composed of monofilament yarns woven into a resilient uniform configuration. Use a mat that has a matrix that exhibits very high interlock and reinforcement capacities with both soil and root systems and demonstrate a high tensile modulus. TRMs manufactured from discontinuous or loosely held together by stitched or glued, netting, or composites are not allowed in this category. Use only components that are 100% synthetic and resistant to biological, chemical, and ultraviolet degradation. Use this category when field conditions exist with high loading and/or high survivability requirements. These requirements consist of maintenance, structural backfills protecting critical structures, potential traffic areas, abrasion, higher factors of safety, and/or general durability concerns.

4. TRMs shall meet the minimum material and performance requirements contained in the following table:

Property[1]		Test Method	Type 1	Type 2	Type 3
Material	Thickness	ASTM D6525	0.25 in	0.25 in	0.25 in
	Tensile Strength[2]	ASTM D6818	125 lb/ft	1,500 lb/ft	3,000 lb/ft
	UV Resistance[3]	ASTM D4355	80% @ 500 hrs	80% @ 1,000 hrs	90% @ 3,000 hrs
Performance	Maximum Shear Stress (Channel Applications)	ASTM D4640	8 lb/ft^2	10 lb/ft^2	12 lb/ft^2
	Maximum Slope Gradient (Slope Applications)	N/A	1:1 (H:V) or flatter	1:1 (H:V) or flatter	1:1 (H:V) or greater

1. For TRMs containing degradable components, all values must be obtained on the non-degradable portion of the matting.
2. Minimum Average Roll Values, machine direction only. Tensile strength from ASTM D5035 may be substituted upon approval.
3. Tensile strength of structural components retained after exposure.
4. Minimum shear stress that fully-vegetated TRM can sustain without physical damage or excess erosion (0.5 in soil loss) during a 30-minute flow event in large scale testing. Acceptable large scale testing protocol includes ASTM D6460 or independent testing conducted by the Texas Transportation Institute, Colorado State University, Utah State University, or other approved testing facility.

J. Sediment Basin Outlet Structures

1. The base, riser, and outlet pipe shall conform to the details as shown on the plans. The riser shall include an anti-vortex device and the outlet pipe shall include anti-seep collars as shown.

PART 3 - EXECUTION

3.1 SWPPP PREPARATION

A. The Erosion Control Plan for this project prepared by Engineer has been included in the Plans. The completed SWPPP will be provided to Contractor prior to initiation of construction and will be based on the Erosion Control Plan.

B. Contractor shall be co-permittee with Division on the IDNR NPDES General Permit No. 2 that shall be completed by Division.

3.2 SWPPP MANAGEMENT

A. Contractor and all subcontractors are required to sign the certification statement one (1) week prior to start of construction. The signed copies shall be kept with the SWPPP in the contractor's field office.

B. Contractor shall be responsible for implementation of the various control measures during construction within the project limits as defined in the SWPPP.

C. Contractor shall properly manage all hazardous materials (i.e. fuel, oil, concrete wash out, etc.) brought to the site to conform to all at his own expense.

D. Engineer and Division will complete the required inspections and will inform Contractor of modifications and additions that are needed. Contractor shall complete these modifications and additions as soon as practical.

E. Contractor may propose alternative measures than those specified by Engineer but shall receive approval from Division or Engineer prior to installation of these alternate measures.

F. Contractor shall maintain access to the site at all times during construction.

G. Division will file the Notice of Discontinuation after final stabilization is achieved.

3.3 INSTALLATION OF SEDIMENT AND EROSION CONTROL MEASURES

A. Surface Roughening

1. Directional Tracking: Operate tracked equipment up and down slopes that are less steep than three to one horizontal to vertical (3H:1V) to create ridges that are perpendicular to the slope.

2. Grooving/Furrowing: Use rippers, disks, harrows, chisel plows, or other equipment capable of operating on the slope to create grooves that are about three (3) inches deep and spaced a maximum of fifteen (15) inches apart. Grooves must be made along the contour and perpendicular to the slope.

B. Erosion Control Mulching

1. Conventional: Uniformly distribute mulch over the required area at a rate of two (2) tons per acre and work the mulch into the soil with a mulch tucker designed to anchor the mulch into soil by means of dull blades or disks.

2. Other types of mulching, if approved by Engineer, will be at the determined rates of application with appropriate equipment.

C. Compost Blankets

1. Loosen the ground to a minimum depth of one (1) inch and evenly apply the compost to the specified depth.

2. All concentrated flows shall be diverted away from the slope.

3. No heavy equipment shall be operated over the compost blanket throughout the required period of protection.

D. Temporary Erosion Control Seeding

1. Till soil to a minimum depth of five (5) inches with a disk, harrow, or field cultivator.

2. Apply Nitrogen (N) fertilizer to all seeded areas at a rate of fifty (50) pounds per acre.

3. On areas accessible to field machinery, sow seed with an endgate cyclone seeder. Areas that are not accessible shall use hand-operated cyclone seeding methods.

4. Cover the seed and fertilizer lightly by tiling the seeded area with a disk, rigid harrow, spring tooth harrow, or field cultivator.

E. Temporary Earth Diversion Structures

1. Construct the temporary earth diversion structure at the location and with the dimensions shown on the plans. Adequately compact fill to prevent failures and seepage. Failures due to inadequate compaction shall be repaired by Contractor at no cost to Division.

2. Ensure positive drainage along the diversion ditch to the designated outlet area.

3. Apply temporary erosion control seeding if structures are specified to be vegetated.

F. Silt Fences

1. Install silt fences along the specified contour and to the dimension shown on the erosion control plan or as directed by Engineer. The ends of continuous run silt fences shall be turned uphill with a J-hook to prevent runoff from flowing around the end when the water behind the fence ponds to a level even with the top of the fence.

2. Install silt fence fabric with a mechanical soil slicing machine that creates a slit in the ground while simultaneously installing the fabric. The trenching method may be used when the slicing method cannot be used and is subject to approval by Engineer. The silt fence fabric shall be installed such that twelve (12) inches is installed at least six (6) inches below the ground line (folding is allowed). After the fabric is installed, the ground shall be compacted on each side by driving over the area with rubber tired equipment or by other means as necessary to adequately anchor the material in the ground to prevent pullout and water flow under the fence.

3. Steel post supports shall be placed at a maximum spacing of eight (8) feet or as directed by Engineer. The steel posts shall be installed with a minimum embedment depth of twenty (20) inches. Fabric shall be tied to the steel posts at least four (4) evenly spaced locations using metal ties or plastic ties that have ultraviolet protection.

4. Non-functioning silt fences that allow flow underneath or that are damaged due to improper installation shall be repaired or replaced by Contractor at no cost to Division.

5. Silt fences shall be cleaned out when the accumulated sediment reaches a level of one-half the height of the silt fence or when the silt fence becomes clogged with sediment and no longer allows runoff to flow through. Silt fences shall be replaced when necessary.

6. Silt fences shall be removed at the appropriate time by removing the stakes, ties, and fabric from the site or burying material in an approved location and manner. The accumulated sediment shall be spread and disturbed in surrounding areas and smoothed to match finished grade and to ensure proper drainage.

G. Check Dams

1. Install check dams as shown on the plans or as recommended by the manufacturer.

2. Clean out check dams as directed by Engineer when they become non-functioning by sediment accumulation.

3. Remove check dam as directed by Engineer after site is stabilized. All accumulated sediment and disturbed areas shall be regraded and spread as needed to match finished grade and ensure proper drainage.

H. Filter Berms

1. Filter berms shall be constructed to the dimensions and along the contour as shown on the plans or as directed by Engineer.

2. The ends of filter berms shall be turned uphill to prevent runoff from flowing around the ends.

3. Apply temporary erosion control evenly to the surface if the berm is specified to be vegetated.

4. Filter berm shall be cleaned out when sediment accumulation reaches one-half of the height of the berm or as directed by Engineer.

I. Filter Socks

1. Filter socks shall be filled with the appropriate filter material pneumatically to the size and length indicated on the plans or as directed by Engineer.

2. Filter socks shall be placed along the contour as indicated on the plans or as directed by Engineer. The ends of the each filter sock shall be turned uphill to create a J-hook to prevent runoff from flowing around the ends when water ponds up to a level even with the top of the sock.

3. Additional filter material or soil shall be placed on the uphill side of the filter sock between the filter sock and the ground.

4. Drive support stakes into the ground on the downhill side of the filter socks at a maximum spacing of ten (10) feet. Place additional stakes as needed to secure the sock and prevent movement.

5. Non-functioning filter socks that allow flow underneath or socks that are damaged due to improper installation shall be repaired or replaced by Contractor at no cost to Division.

6. Filter socks shall be cleaned out when the accumulated sediment reaches a level of one-half the height of the sock or when the sock becomes clogged with sediment and no longer allows runoff to flow through.

7. Filter socks shall be removed at the appropriate time by slicing the sock longitudinally and removing the mesh and staking materials. The filter material and accumulated sediment shall be spread to match finished grade and ensure proper drainage.

J. Wattles

1. Construct a shallow trench that is two (2) to four (4) inches deep that matches the width and the contour of the wattle. Place the wattle and compact excavated soil against the wattle on the uphill side.

2. Drive stakes through the center of the wattle at a maximum spacing of four (4) feet and as needed to secure the wattle and prevent movement. Extra staking is needed at butted ends to prevent leakage. Do not overlap wattles.

3. Non-functioning wattles that allow flow underneath or wattles that are damaged due to improper installation shall be repaired or replaced by Contractor at no cost to Division.

4. Wattles shall be cleaned out when the accumulated sediment reaches a level of one-half the height of the wattle or when the wattle becomes clogged with sediment and no longer allows runoff to flow through.

5. Wattles shall be removed at the appropriate time by slicing the wattle and removing the mesh and staking materials. The filler material and accumulated sediment shall be spread to match finished grade and ensure proper drainage.

K. Temporary Rolled Erosion Control Products (RECPs)

1. Install all RECPs according to the manufacturer's published installation recommendations along with the following minimum requirements.

2. Grade and smooth surface. Remove all rocks, clods, vegetation, or other obstructions that will prevent direct contact between the RECP and the soil surface.

3. When specified, prepare seedbed and place seed and fertilizer according to Section 02700.

4. Slope Application: Install anchor trench along at the top of the slope. Unroll the RECP down and horizontally across the slope. Place consecutive blankets down the slope end over end, shingle style. Overlap rolls a minimum of three (3) inches and install anchors at a maximum spacing of eighteen (18) inches along all the overlaps. Backfill and compact trench and place additional seed as required.
5. Channel Application: Install RECP As shown on the details shown on the plans.

L. Turf Reinforcement Mats (TRMs)

1. Install TRMs according to the published installation literature for the product specified and for the appropriate application.

2. Depending upon the sequence and timing of construction, it may be necessary to delay installation of TRMs to correspond to dates when permanent seeding can take place in the spring and fall seeding periods.

M. Sediment Basin Outlet Structures

1. Concrete Base: Construct concrete base and anchor riser section as shown on the plans.

2. Dewatering Device: Drill holes in riser section with the number, diameter and configuration as shown on the plans. Wrap the perforated section of the riser pipe with metal hardware cloth.

3. Riser and Barrel: Place the specified corrugated metal pipe and properly backfill as needed with compacted lifts of soil. The anti-vortex and anti-seep collars shall also be properly placed where shown on the plans.

4. Repairs required to the sediment basin or outlet structure due to improper installation shall be repaired by Contractor at no cost to Division.

3.4 MEASUREMENT AND PAYMENT

The construction cost of all work included in this SECTION of the Construction Specifications shall be included in Contractor's unit prices set forth in the Proposal and Schedule of Prices *(Document C)* for the work items described below. The unit price for each of these items shall include its pro rata share of overhead so that the sum of the products obtained by multiplying the unit prices so set forth by the amount of the work actually constructed, measured as described herein, shall constitute full payment to Contractor for performance of the work included in this SECTION. The unit price shall include all labor, materials, and equipment necessary for proper installation of the various controls.

If erosion and sediment control measures are properly installed by Contractor and storm events cause failure or reduces the effectiveness of these measures, replacement shall be completed as directed by Engineer and will be paid for by Division to Contractor as defined below.

If temporary erosion and pollution control measures are required due to Contractor’s negligence, carelessness, or failure to install permanent controls as part of his work as scheduled and are deemed necessary by Engineer or Division, the measure shall be completed by Contractor at no cost to Division.

In case of repeated failures on part of Contractor to control erosion, pollution, and/or siltation, Division reserves the right to employ outside assistance to provide the necessary corrective measures. Such incurred direct costs, plus Engineering costs, will be at Contractor’s own expense with the appropriate deduction taken from future pay requests.

Measurement and payment for each work item in this SECTION shall be in accordance with the following:

A. *Surface Roughening:* Payment for surface roughening performed as directed by Engineer will be measured and paid for by the contract unit price per acre. Areas shall be jointly measured by Engineer and Contractor.

B. *Erosion Control Mulching:* Payment for mulching will be measured and paid for at the contract unit price per acre. Mulch placed outside designated areas will not be measure for payment. Areas shall be measured jointly by Engineer and Contractor.

C. *Compost Blankets*: Payment for the cost of placing compost blankets will be measured and paid for by the contract unit price of each square foot for each thickness of blanket specified and shall include preparing the subgrade. Compost blankets placed outside specified areas will not be measured for payments. Measurements will be taken jointly by Engineer and Contractor.

D. *Temporary Erosion Control Seeding:* Payment for placement of temporary seeding will be measured and paid for by the acre. The unit contract price shall include preparing the subgrade,

placement of fertilizer and seed, and final cultivating. The area for payment will be measured jointly by Engineer and Contractor.

E. *Temporary Earth Diversion Structures:* Payment for installation and removal of temporary earth diversion structures will be measured and paid for by the linear foot for each type and size of diversion structure. Payment will be jointly measured by contractor and Engineer. Full payment for this item will not be made until removal is complete. The unit price shall include all labor and equipment necessary.

F. *Silt Fences:* Payment for installation of silt fence will be measured and paid for at the contract unit price per linear foot of silt fence as measured jointly by the contractor and Engineer. The unit cost shall include all labor, equipment, and materials for proper installation. Payment will be made for removal of silt fence, either at the end of the project after seeding is established or if replacement silt fence is required during construction. Payment will be made based on the contractor's unit price and will match the linear feet of silt fence installed. The removal price for silt fence shall include removal and disposal of stakes, fabric, and ties. The removal price shall also include restoring the disturbed area to finished grade and removal or distribution of the accumulated sediment.

G. *Check Dams:* Payment for temporary check dams will be measured and paid for at the contract unit price per linear foot of each size and check dam specified. The length of the check dams will be measured jointly by Engineer and Contractor. A separate unit price shall be provided for removal when required.

Permanent check dams made from riprap will be paid for to the nearest one-tenth (0.1) of ton of material placed provided the dimensions of the check dam are similar to that shown on the plans or otherwise approved. Filter fabric used beneath the riprap will not be measured for payment and shall be considered incidental. The unit cost shall include all labor, equipment, and material costs that are necessary. Excavation costs and distribution of the soil materials are considered incidental and shall not be measured separately for payment.

H. *Filter Berms:* Payment for filter berms will be measured and paid for at the contract unit price by the linear foot of each size specified. Measurements will be taken longitudinally along the top of the berm and will be measured jointly by Contractor and Engineer. Filter berms that are needed to replace existing filter berms because of sediment accumulation will also be measured for payment.

I. *Filter Socks:* Payment for filter socks will be measured and paid for at the contract unit price by the linear foot of each diameter specified. Measurements will be taken jointly by Contractor and Engineer. Filter socks that are needed to replace existing filter socks because of sediment accumulation will also be measured for payment. Removal of filter sock will also be paid for at contractor's unit price and shall include removal and disposal of sock and stakes. The removal cost shall also include distribution of the accumulated sediment and filter material.

J. *Wattles:* Payment for wattles will be measured and paid for at the contract unit price per linear foot. Any excavation required for placement and the staking of the wattle shall be considered incidental to the installation costs. A separate contract unit price shall be provided for removal. The length of wattle for payment of installation and removal shall be the same and measured jointly by Engineer and Contractor.

K. *Temporary Rolled Erosion Control Products (RECPs):* Payment for temporary RECPs will be measure and paid for at the contract unit price per square yard of area covered for each type used. Overlaps will not be measured for payment. Staples, anchors, or other products needed for proper installation are considered incidental. Areas shall be jointly measured by Contractor and Engineer.

L. *Turf Reinforcing Mats (TRMs):* Payment for TRMs will be measure and paid for at the contract unit price per square yard of area covered for each type used. Overlaps will not be measured for

payment. Staples, anchors, or other products needed for proper installation are considered incidental. Areas shall be jointly measured by Contractor and Engineer.

M. *Sediment Basin Outlet Structures:* Measurement and payment will be made for each sediment basin outlet structure installed by size. The contract unit price shall include all materials, labor, and equipment required to construct the outlet structure as specified and shown on the plans. The unit price for installation shall include the concrete base, anti-vortex device, outlet pipe, and any anti-seep collars required. Earthwork required for construction of the sediment basin will be measured and paid as part of the general excavation quantities.

Measurement and payment will also be made for each sediment basin cleanout required during construction. Contract unit price includes dewatering, and removal and disposal of accumulated sediment. The measurement and payment will also be made for each sediment basin outlet structure properly removed. Contract unit price includes dewatering and removal of sediment accumulated at the end of the project, disposal of the outlet structure, concrete base, and emergency spillway. Earthwork required to restore the sediment basin and restoration of the area to finished grade will be measured and paid for separately.

N. *Summary:* Proposal Bid Items applicable to work covered by this SECTION are as follows:

Description	Unit
Surface Roughening	Acre
Erosion Control Mulching	Acre
Compost Blankets	Square Foot
Temporary Erosion Control Seeding	Acre
Temporary Earth Diversion Structures	Linear Foot
Silt Fences – Installation	Linear Foot
Silt Fences – Removal	Linear Foot
Check Dams – Temporary	Linear Foot
Check Dams – Permanent	Ton
Filter Berms	Linear Foot
Filter Socks – Installation	Linear Foot
Filter Socks – Removal	Linear Foot
Wattles – Installation	Linear Foot
Wattles – Removal	Linear Foot
Temporary Rolled Erosion Control Products	Square Yard
Turf Reinforcing Mats	Square Yard
Sediment Basin Outlet Structures – Installation	Lump Sum
Sediment Basin Outlet Structures – Cleanout	Lump Sum
Sediment Basin Outlet Structures – Removal	Lump Sum

END OF SECTION 02120

INDEX

SECTION 02300 - DRAINAGE SYSTEMS, GENERAL

PART 1 GENERAL

1.1 DESCRIPTION
1.2 QUALITY ASSURANCE
1.3 SUBMITTALS

PART 2 - PRODUCTS

2.1 SPOIL MATERIALS
2.2 PIPE
2.3 RISERS
2.4 FILTER FABRIC
2.5 EROSION CONTROL MAT
2.6 RIPRAP
2.7 EROSION STONE
2.8 CONCRETE
2.9 GROUT
2.10 RODENT GUARDS
2.11 TRASH RACKS/BAR GUARDS
2.12 POROUS BACKFILL
2.13 OTHER MATERIALS

PART 3 - EXECUTION

3.1 SURFACE CONDITIONS
3.2 PROTECTION
3.3 CARE OF WATER
3.4 FLOW LINES AND GRADES
3.5 TILING & RISERS
3.6 PIPES
3.7 FILTER FABRIC
3.8 RIPRAP DITCHES & OTHER RIPRAP WORK
3.9 EROSION CONTROL MAT
3.10 TERRACES
3.11 MEASUREMENT AND PAYMENT

PART 1 - GENERAL

1.1 DESCRIPTION

A. Work Included

Work under this SECTION covers requirements for materials, tools, equipment and services necessary to complete the drainage systems for this project. The work shall include, but is not necessarily limited to, completion of the following work:

1. Field engineering
2. Complete installation of all waterways
3. Terraces construction
4. Riprap ditches, ditch construction and riprap placement
5. Pipe outlets
6. Terrace intakes
7. Underground outlets
8. All excavation, backfill, and compaction necessary to complete these drainage systems

1.2 QUALITY ASSURANCE

A. Contractor shall use adequate numbers of skilled workmen who are thoroughly trained and experienced in the necessary crafts and who are completely familiar with the specified requirements and the methods needed for proper performance of the work of this SECTION.

B. Contractor shall use equipment adequate in size, capacity, and numbers to accomplish the work in a timely manner.

C. In addition to complying with requirements of governmental agencies having jurisdiction, Contractor shall comply with the directions of Engineer and Division.

1.3 SUBMITTALS

A. Submit material certification, including material type and gradation, for all riprap and porous backfill.

B. Submit manufacturer's certification and material data for all material delivered to the project site for the work of this section.

C. Submit weight tickets and/or shipping tickets for all materials delivered to the Project site for the work of this SECTION.

PART 2 - PRODUCTS

2.1 SPOIL MATERIALS

A. Drainage way subgrades and backfill for pipe, tiling and risers shall be constructed of spoil materials from the required excavation. Backfill material shall be sorted as needed to become free of debris and rocks larger than two (2) inches adjacent to the tiling, and four (4) inches thereafter to the surface.

2.2 PIPE

A. Corrugated Polyethylene

1. Pipe for tiling shall be non-perforated corrugated polyethylene (PE) tubing and fittings, equal to IDOT Section 4143.01-B, with sizes as shown on the Plans. Fittings may be made of polyvinylchloride (PVC), Schedule 40. Pipe for tiling outlet, the last 20 (twenty) feet minimum, shall be solid PVC pipe, Schedule 40, sized to match the incoming PE tubing. The PVC pipe shall be furnished with no more than one joint. Tees required at wetland tiling outlets shall be solid PVC, Schedule 40, with size to match the incoming PVC pipe.

B. High Density Polyethylene Pipe (HDPE)

1. HDPE pipe shall be high density, high molecular weight, polyethylene pipe meeting the requirements of AASHTO M 294, Type S corrugated exterior and smooth interior. The pipe shall conform to ASTM D3350 with a minimum cell classification value of 345420C and the minimum pipe stiffness at five percent (5%) deflection per ASTM D2412. The fittings supplied shall be made from polyethylene resin which meets this same specification.

C. Polyvinyl Chloride Pipe (PVC)

1. PVC pipe shall be plastic PVC – ASTM D3034-SDR35 Type 1, Grade 1. Joints shall meet ASTM D3033/D3034 Standards.

D. Reinforced Concrete Pipe (RCP)

1. All reinforced concrete pipe and risers shown on the Plans shall meet the requirements of IDOT Section 4145. The diameter and length shall match that shown on the Plans. The joints shall be sealed using cold applied bituminous jointing material. All lift holes shall be plugged with grout.

.

2.3 RISERS

A. Terrace Outlets

1. Risers shall be as manufactured by Hickenbottom, Inc.; Agri Drain Corporation; or approved equal. Sizes shall be as shown on the Plans. The top three (3) feet shall be perforated with forty (40), one (1)-inch diameter holes and at least thirty (30) open square inches per foot of riser. Below grade, the riser shall be non-perforated; if perforated, openings shall be completely sealed with three (3) wraps of polyethylene tape or other suitable tape. The riser shall connect onto the tiling with a manufactured tee of a size to match the outgoing tile. Tees which constrict flows shall not be allowed.

B. Dam and/or Wetland Outlets – See SECTION 02310 – Drainage Systems, Dams and Structures.

2.4 FILTER FABRIC

A. Filter fabric shall meet the requirements of IDOT Section 4196.01-C, Engineering Fabric - Embankment Erosion Control.

2.5 EROSION CONTROL MAT

A. Erosion control mat for slopes shall be made of interlocking coconut or wood fibers with plastic netting applied to both sides for holding the fibers in place. The product should be rated to perform on slopes of up to two horizontal to one vertical (2H:1V) with a longevity of more than twelve (12) months and up to two (2) years.

B. Erosion control mat for channels and spillways shall be made of interlocking coconut or wood fibers with plastic netting applied to both sides for holding the fibers in place. The product should be rated to perform on slopes of up to two horizontal to one vertical (2H:1V) with a longevity of more than two (2) years and up to three (3) years, and must be capable of withstanding the flows as determined by Engineer.

C. Wire staples will not be allowed on the project. All "stapling" of the mat must be done using twelve (12) inch long, tapered hardwood stakes. The staking pattern shall match the manufacturer's recommended stapling pattern for the project's soil and discharge conditions and, where more stringent, the pattern shown on the Plans.

2.6 RIPRAP

A. Riprap shall be quarried limestone, sound, durable, and angular or blocky in shape. No more than ten percent (10%) of the stone shall have an elongation greater than 3:1. No stone shall have an elongation greater than 4:1. Riprap shall be well-graded material meeting the specifications of IDOT Sections 4130.01 and 4130.02, Class A Revetment for Non-primary projects.

B. The stone shall be free from cracks, seams, or other defects that would tend to increase its deterioration from natural causes. The material shall contain a combined total of not more than five (5) percent by weight of earth, sand, shale, and non-durable rock.

C. Engineer shall inspect the riprap at the quarry prior to initial loading, and may do so periodically throughout material delivery. After visual inspection, Engineer may designate material as too fine or too coarse and may require material to be loaded from another area. If material changes occur as the material is delivered to the project site, Engineer has the authority to require removal of the objectionable material and replacement with suitable riprap at no cost to Division.

2.7 EROSION STONE

A. Erosion stone for the tiling outlets shall be quarried limestone and shall consist of a nominal six (6) inch mixture, by visual examination. Stone shall meet the specifications of IDOT Sections 4130.03, 4130.04 and 4130.05 Erosion Stone gradation.

2.8 CONCRETE

A. All connections in piping where a change in pipe size or type occurs, and every joint where there is a sudden change in pipe direction, shall be sealed and/or buttressed with concrete. Concrete can be ready-mix, hand-mixed or packaged gravel-mix concrete. Areas where concrete is known to be needed include:

1. PE tubing to PVC outlets, all sizes.
2. Riser connections, all sizes.
3. Tiling to main line tiling at wye or tee, all sizes
4. Any other locations shown on plans.

2.9 GROUT

A. Grout for riprap ditch lining shall be composed of ten (10) sacks or nine-hundred and forty (940) pounds of Type I or II Portland cement to around two-thousand two-hundred (2200) pounds of fine aggregate material conforming to IDOT 4110.01, Gradation No. 2 for each cubic yard. Potable water shall be added to provide a thick creamy consistency and should not exceed forty-seven (47) gallons per cubic yard. Air entraining admixtures conforming to ASTM C 260 shall be added to provide an air content of between six (6) to ten (10) percent.

B. Flyash can also be substituted for Portland cement in the grout mixture provided the flyash used meets the requirements of IDOT Section 4108 and does not exceed twenty (20) percent of the Portland cement.

2.10 RODENT GUARDS

A. Electroplated zinc-coated rodent guards for the appropriate size of piping shall be as distributed by Agri Drain Corp. or approved equal. Rodent guards shall be hinged to allow debris to exit the piping when flows are present.

2.11 TRASH RACKS/BAR GUARDS

A. Bar Guard Intakes

Trash racks shall be Bar Guard Intakes as distributed by Agri Drain Corp., or approved equal. Sizes shall be as shown on the Plans.

B. Other Trash Racks or Guards shall be as specified on the Plans or the Engineering Special Conditions.

2.12 POROUS BACKFILL

A. Porous Backfill for subdrain shall be non-calcareous material meeting IDOT Item 4131, Gradation No. 29. Limestone porous backfill will not be allowed.

2.13 OTHER MATERIALS

A. Provide other materials, not specifically described but required for a complete and proper installation, as selected by Contractor, subject to the approval of Engineer.

PART 3 - EXECUTION

3.1 SURFACE CONDITIONS

A. Contractor shall examine the areas and conditions under which work of this SECTION will be performed and shall correct conditions detrimental to timely and proper completion of the work. Contractor shall not proceed until unsatisfactory conditions are corrected.

3.2 PROTECTION

A. Contractor shall use means necessary to prevent dust from becoming a nuisance to the public, to neighbors, and to other work being performed on or near the site.

B. Contractor shall maintain access to adjacent areas at all times.

C. Contractor shall protect previous construction from damage while constructing drainage systems.

D. Contractor shall protect drainage systems from damage during subsequent construction in the areas.

E. Contractor shall follow all guidelines for trench safety provided by OSHA.

3.3 CARE OF WATER

A. Contractor shall furnish and operate sufficient pumps and/or provide other means including materials, labor, and equipment to prevent interference to any work by water, ice or snow. No structure or pipe shall be laid in water, and no water shall be allowed to run into or over any work or pipe until installation is capable of accepting water without damage or deterioration. Damage of any kind resulting from insufficient pumping facilities or similar lack of proper conduct of the work shall be corrected by Contractor at no cost to Division.

3.4 FLOW LINES AND GRADES

A. Construct drainage systems precisely to lines and grades as shown on the Plans or as required for proper functioning.

B. Pipe runs shall be installed straight with a uniform slope to meet entrance and exit conditions at both ends of the pipe run. Slopes shall be uniform in so far as practical. Piping shall be installed with a minimum of two percent (2%) slopes unless conditions indicate flatter slopes are required.

C. Match flow lines and provide smooth transitions between intersecting riprap ditches, between terrace tile outlets and riprap ditches, between subdrain outlet and grassed swale, and between terrace tile outlets and grassed swales.

3.5 TILING & RISERS

A. Tiling

1. Install tiling in strict accordance with these Specifications, manufacturer's recommendations, and the Plans. In case of discrepancy, the most stringent requirements shall apply. Install tiling after completion of rough grading in affected areas.

2. Excavate trenches to a minimum depth of three and one-half (3.5) feet below finish grades where grades permit, and to a width no wider than eighteen (18) inches for six (6) inch tiling. In lieu of using a backhoe for installation, tiling may be installed with a tiling machine provided the machine is equipped with a cutting edge which creates either a ninety (90) degree V-groove, or a semi-circular trough of a size which shall accept the tiling without excess movement.

3. After excavation, lay tiling in bottom of trench. Sort out any unsuitable material, such as larger rocks or sticks, from excavated material to be used as backfill. If excavated material is unsuitable, then provide an alternate source of suitable backfill. Carefully place and compact backfill within the area around and to within one-half (0.5 feet) above the tile to ensure that backfill is placed under the pipe haunches and that the tiling is properly and fully supported. Care shall be taken to not collapse or displace the tile during backfilling procedures. Backfill placed within the remainder of trench shall be placed in lifts of no more than one (1) foot in structural areas and no more than (two (2) feet in non-structural areas. Each lift shall be compacted with either the bucket of a hoe or the wheel of construction equipment. Reshape and/or compact adjacent ground surface as required.

4. Except at top riser of each run of tiling, connect subsequent riser tubing to main tiling run with a wye or tee. Place concrete collar around joint.

5. Seal all below grade joints in tiling with three (3) wraps of polyethylene tape or other suitable tape. This applies to all tees, wyes, elbows, couplings, joints, etc. that also have a concrete collar.

6. The last twenty (20) feet, minimum, or terrace tiling which daylights shall be rigid PVC piping. Seal the transition joint between PE tubing and PVC pipe as per A.4 above and place a concrete collar around the joint. Install a rodent guard within six (6) inches of the outlet end of all PVC piping. Where tiling outlets into a wetland, install the rodent guard in the pipe ahead of the outlet tee. Fasten outlet tee to pipe using aluminum sheet metal screws.

7. If any tiling collapses due to improper installation or from routing of construction equipment over the trench, or it becomes clogged for whatever reason, correct the malfunction at no cost to Division. Correction of any malfunction shall also be required during the one (1) year guarantee period and shall be repaired at no cost to Division.

B. Riser

1. Install terrace risers in strict accordance with these Specifications, manufacturer's recommendation, and the Plans. In case of discrepancy, the most stringent requirements shall apply. Provide tees for every riser. Depending on location, use either an in-line tee or a blind tee with cap, as recommended by manufacturer. Fasten riser sections using aluminum sheet metal screws. Seal below-grade riser joints with three (3) wraps of polyethylene tape or other suitable tape and then cover joints with concrete as shown on the Plans.

2. Contractor shall install two (2) steel fence posts on opposite sides of each riser and bind them together with No. 9 wire.

3. Backfill excavation with compacted lifts using excavated material unless this material is unsuitable. Provide suitable backfill material if necessary. Reshape and/or compact adjacent ground surface as required.

3.6 PIPES

A. Pipes shall be installed in strict accordance with these Specifications, manufacturer's recommendations, and the Plans. In case of discrepancy, the most stringent requirements shall apply. Install tiling after completion of rough grading in affected areas.

B. Excavate trenches to the minimum depth as shown on the Plans and to widths to allow for twelve (12) inches of clearance on each side of the pipe. The trench shall have vertical side walls to the crown of the pipe with the remainder of the excavations sloped as needed for stability and to satisfy OSHA requirements.

C. Lay the pipe in the center of the trench with female joints facing upstream. Place joint sealant as required as each piece is placed. All gaskets shall be protected during installation.

D. Backfill with suitable material in lifts not exceeding eight (8) inches and compacted by hand operated mechanical tampers to a height at least twelve (12) inches above the pipe. Exercise care not to cause the pipe to shift and/or to uplift while placing and compacting material up to the top of

the pipe. Continue backfilling with compacted lifts to the surface. Mass dumping of the backfill will not be allowed. Settled areas shall be corrected by Contractor at no cost to Division.

3.7 FILTER FABRIC

A. Filter fabric shall be delivered to the job site in such a manner as to facilitate handling and incorporation into the work without damage. Material shall be stored in such a manner as to prevent exposure to direct sunlight and damage by other construction activities.

B. Prior to the installation of the fabric, the application surface shall be cleared of debris, sharp objects and trees. Tree stumps shall be removed to a depth of at least two (2) feet below the ground surface. In the case of subgrades, all wheel tracks or ruts in excess of three (3) inches in depth shall be graded smooth or otherwise filled with soil to provide a reasonably smooth surface.

C. Fabric may be installed on the application surface either by hand or mechanical methods, provided that the fabric is not torn or the surface rutted. Fabric of insufficient width or length to fully cover the specified area shall be lapped a minimum of twenty-four (24) inches, or sewn. If sewn, the minimum lap shall be four (4) inches and the seam strength shall be equal to or more than the minimum grab tensile strength of the fabric when wet tested.

D. Placement of material on the fabric shall be accomplished by spreading dumped material off of previously placed material with a bulldozer blade or end-loader, in such a manner as to prevent tearing or shoving of the cloth. Dumping of material directly on the fabric will only be permitted to establish an initial working platform. No vehicles or construction equipment shall be allowed on the fabric prior to placement of the granular blanket.

E. Fabric which is damaged during installation or subsequent placement of riprap, due to failure of Contractor to comply with these provisions, shall be repaired or replaced at his expense, including costs of removal and replacement of the riprap. Torn fabric may be patched in-place by cutting and placing a piece of the same fabric over the tear. The dimensions of the patch shall provide for at least two (2) feet of overlap in every direction, and it shall be weighted or otherwise secured to prevent the granular material from causing lap separation.

3.8 RIPRAP DITCHES & OTHER RIPRAP WORK

A. When rough grades have been achieved, excavate the area to receive riprap or erosion stone to permit placement of riprap or stone the full depth as shown on the Plans. Dispose of excavated material by incorporating it into general grading of the site.

B. Riprap or erosion stone shall be placed over filter fabric in areas shown on the Plans and in a manner which shall produce a reasonably well-graded mass of stone with the minimum practical percentage of voids. All material shall be placed and distributed such that there shall be no objectionable accumulations of either the larger or smaller sizes of stone, and such that the entire mass of stone shall be in accordance with the lines, grades and thickness as shown on the Plans.

C. Contractor shall place the riprap or erosion stone so as to not tear, puncture, or shift the filter fabric. Riprap or stone shall not be dropped more than two (2) feet when being placed on filter fabric. Tears or rips in the fabric shall be repaired in accordance with manufacturer's recommendations.

D. It is the intent of this Specification to produce a fairly compact riprap or stone protection in which all sized of material are placed in their proper proportions. Placing or rearranging of individual stones by hand or mechanical equipment should be anticipated and may be required to the extent necessary to secure the specified results.

E. Contractor shall complete the following in riprap ditches requiring grout:

1. Larger spaces between stones shall be filled with smaller pieces of riprap. The stones shall be compacted to give them firm bearing and stability.

2. After stone surface has been inspected and approved, the spaces between the stones shall be completely filled with grout. The grout shall be brushed or broomed into the spaces to ensure proper filling.

3. Grout placement and curing shall meet the requirements of IDOT Section 2507.03 G, Grouting.

3.9 EROSION CONTROL MAT

A. Careful installation of erosion control mat is critical for its immediate and long term performance. Contractor shall install per details shown on the Plans and in strict accordance with manufacturer's recommendations. Where details on the Plans show more stringent requirements, drawing details shall apply. Staking patterns shall be based on the design discharge rates as determined by the Engineer.

B. Contractor shall fine grade the surface as uniformly as possible and remove any rocks, roots and other deleterious substances. The success of the mat relies heavily on its placement such that it is uniformly in contact with the ground. Proceed with seeding operations in Section 02700 – SEEDING or Section 02710 – INTERIM SEEDING, including soil testing, seedbed preparation, liming, fertilizing, seeding and mulching.

C. After seeding and mulching has been performed in accordance with Section 02700, Contractor shall install erosion control mat as and where shown on the Plans.

D. Contractor shall reseed all disturbed areas by hand. A light overseeding by hand of the overall mat area may be beneficial but is not mandatory.

3.10 TERRACES

A. Terraces shall be installed after rough grading is completed.

B. Terraces shall be constructed in conformance with details and dimensions shown on the Plans. Fill placement and compaction shall be as specified in Section 02200 EARTHWORK - ROUGH GRADING, Item *3.9 Fill Placement and Compaction*.

3.11 MEASUREMENT AND PAYMENT

The construction cost of all work included in this Section of the Construction Specifications shall be included in Contractor's unit prices set forth in the Proposal and Schedule of Prices (*Document C*) for the work items described below. The unit price for each of these items shall include its pro rata share of overhead so that the sum of the products obtained by multiplying the unit prices so set forth by the amount of the work actually constructed, measured as described herein, shall constitute full payment to Contractor for performance of the work included in this SECTION.

Measurement and payment for each work item in this SECTION shall be in accordance with the following:

A. *Riprap and Erosion Stone*: The unit prices shall include all materials and work required for installation of the riprap or erosion stone in conformance with these Construction Specifications and the Plans, including excavation, removal and disposal of excavated material, and furnishing and placing the stone. Measurement for payment shall be based on the tonnage of riprap or

erosion stone actually installed as determined from weight tickets, rounded to the nearest one-tenth (0.1) ton. Only material placed in accordance with the Plans and these Specifications shall be measured and paid.

B. *Filter Fabric*: Filter fabric used on the project, in accordance with the Plans and/or approved by Engineer, shall be measured and paid in this Item. The quantity of in-place fabric shall be measured to the nearest square yard jointly by Contractor and Engineer. Laps and waste shall not be measured. Only material placed in accordance with the Plans and these Construction Specifications shall be measured and paid.

C. *Erosion Control Mat*: The unit price for erosion control mat shall represent full payment for furnishing, delivery and installation in strict accordance with these Construction Specifications and the Plans.

Said unit price shall include furnishing and installing the erosion control mat with wooden stakes, including equipment and labor required and reseeding of disturbed areas. Measurement for payment purposes shall be the area installed in square yards, exposed at the surface. No measurement or payment shall be allowed for waste, laps or buried ends or edges.

D. *Riser - Terraces*: Unit prices shall include all materials and work required for installation of risers in conformance with details and dimensions shown on the Plans, these Construction Specifications, and as may be required by the manufacturer. Unit prices shall include furnishing and installing risers, fittings, tape, concrete, excavation, backfill, and all other incidental construction including furnishing and installing silt fencing around the riser, cleaning of sediment, maintenance and repairs. Measurement for payment of risers shall be based on the number of said risers, properly installed and maintained.

E. *Riser - Other*: Unit price shall include all materials and work required for installation of risers in conformance with details and dimensions shown on the Plans and these Specifications. Unit prices shall include furnishing and installing the riser and trash rack or bar guard, connecting the pipe, concrete, excavation, backfill, and all other incidental construction including cleaning of sediment, maintenance and repairs. Measurement and payment of riser shall be based on the number of each riser properly installed and maintained.

F. *Tiling*: The unit prices shall include all materials and work required for installation of the tile and fittings (PE and PVC as applicable) in conformance with details and dimensions shown on the Plans. The unit prices shall include furnishing and installing the pipe, fittings, trenching, removal and disposal of excess trench material, dewatering, backfill, compaction, and all other work items incidental thereto, including rodent guards and tape and concrete for sealing below-grade connections. Tees required on the ends of tiling shall also be incidental to this work item. Measurement for payment shall be based on the length of tiling for a specified diameter actually installed as determined from field measurements and rounded to the nearest foot.

G. *Pipes*: The unit prices shall include all materials and work required for installation of the various pipes and fittings in conformance with details and dimensions shown on the Plans. The unit prices shall include furnishing and installing the pipe, fittings, excavating, removal and disposal of excess trench material, dewatering, backfill, compaction, and all other work items incidental thereto, including sealing of below-grade connections. Measurement for payment shall be based on the length of various pipes for each specified diameter actually installed as determined from field measurements and rounded to the nearest foot.

H. *Grout*: This unit price shall include all materials and work required for installation of grout (riprap channels, stilling basins, etc.) in conformance with these Construction Specifications and the Plans. Measurement for payment shall be based on cubic yards of grout actually installed as determined

from delivery tickets, rounded to the nearest cubic yard. Only material placed in accordance with the Plans and these Construction Specifications shall be measured and paid.

I. *Terrace*: The unit price for terraces in this SECTION shall include materials, equipment, and work required to construct (grade) the terraces in conformance with details and dimensions shown on the Plans. The length of installed terraces shall be measured to the nearest foot jointly by Contractor and Engineer.

J. *Summary*: Proposal Bid Items applicable to work covered by this SECTION are as follows:

Description	Unit
Riprap	Ton
Erosion Stone	Ton
Filter Fabric	Square Yard
Erosion Control Mat	Square Yard
Riser - Terrace	Each
Riser - Other	Each
Tiling - (size)	Lineal Foot
Pipe - (size)	Lineal Foot
Grout	Cubic Yard
Terraces	Lineal Foot

END OF SECTION 02300

INDEX

SECTION 02400 - SUBGRADE PREPARATION, WITHOUT COVER MATERIAL

PART 1 - GENERAL

1.1 DESCRIPTION
1.2 QUALITY ASSURANCE
1.3 PERMITS AND FEES
1.4 DELIVERY, HANDLING, AND STORAGE
1.5 SUBMITTALS
1.6 SITE DISTURBANCES

PART 2 - PRODUCTS

2.1 AGRICULTURAL LIME
2.2 MULCH
2.3 WETLAND FERTILIZER

PART 3 - EXECUTION

3.1 REACTION PERIOD
3.2 TESTING
3.3 WETLAND AREAS
3.4 LIME-MULCH APPLICATION
3.5 MEASUREMENT AND PAYMENT

PART 1 - GENERAL

1.1 DESCRIPTION

A. Work Included

Work under this SECTION covers requirements for materials, tools, equipment and services necessary to complete the subgrade preparation for this project. The work shall include, but is not necessarily limited to, completion of the following work:

1. Field engineering
2. Soil testing
3. Wetland undercut and subgrade preparation
4. Lime-mulch application
5. Incorporation of the applied lime and mulch materials

1.2 QUALITY ASSURANCE

A. Contractor shall use adequate numbers of skilled workers who are thoroughly trained and experienced in the necessary crafts and who are completely familiar with specified requirements and methods needed for proper performance of work of this SECTION.

B. Contractor shall use equipment adequate in size, capacity, and numbers to accomplish work in a timely manner.

C. In addition to complying with requirements of governmental agencies having jurisdiction, Contractor shall comply with directives of Engineer and Division.

D. Applicable Standard

1. Iowa Agricultural Limestone Act.

2. Iowa State University (ISU) Extension Service Publication PM-909, "Preventing Construction Damage to Trees".

1.3 DELIVERY, HANDLING, AND STORAGE

A. Storage of materials on job site must be approved in writing by Engineer.

B. Materials approved for storage on site which are being degraded due to storage must be removed and replaced at no additional cost to Division.

C. Deliver packaged materials to site in supplier's original unopened containers; each container to bear certification as specified.

D. Store packaged materials off ground and protect from moisture.

1.4 SUBMITTALS

A. Agricultural lime

1. Contractor shall submit vendor's certified analysis for ECCE (Effective Calcium Carbonate Equivalent) in minimum pounds of ECCE per ton of material, fineness of agricultural lime, and supplier's name and location.

2. Contractor shall submit results of recent moisture tests for the agriculture lime.

B. Weight Tickets

1. Contractor shall submit weight tickets and/or shipping tickets of all materials delivered to the site for the work in this SECTION to Engineer for payment purposes.

C. Soil Tests

1. Soil tests to determine the applicable liming rate shall be taken by the Engineer with assistance from Contractor. Test results will be submitted to the Contractor and Division when received by Engineer. Payment for these tests will be made by Engineer.

1.5 SITE DISTURBANCES

A. Contractor shall take precautions to insure that equipment and vehicles do not unnecessarily disturb or damage existing grading or other site improvements. Any areas identified by Engineer as becoming excessively disturbed shall be repaired at Contractor's own expense.

PART 2 - PRODUCTS

2.1 AGRICULTURAL LIME

A. Agricultural lime shall be ground calcitic limestone conforming to the current requirements of the Iowa Department of Agriculture and Land Stewardship. The liming material shall contain calcium in the carbonate, oxide or hydroxide form, or a combination thereof. The lime shall have a minimum fineness of fifty-five percent (55%) and shall contain at least one-thousand (1000) pounds ECCE per ton of lime to be applied.

B. If lime containing not less than one-thousand (1000) pounds ECCE per ton is not locally available, Contractor may submit a proposal for use of equivalent material based upon the minimum pounds required of ECCE per acre.

C. Lime sludge salvaged from water treatment plants or other industrial operations will not be approved as a substitute for agricultural lime.

2.2 MULCH

A. Mulch materials shall consist of oats, rye, hay, corn stalks, grass cut from native grasses or other plants approved in writing by Division.

B. Mulch shall be of air dry mulch that has been properly cured and harvested. Mulch harvested after a killing frost or during dormant periods will not be acceptable. Mulch shall not be rotted, brittle, moldy, caked or otherwise degraded.

C. Mulch shall be free of noxious weeds as published by the local County Weed Commissioner and other weeds deemed undesirable by Engineer, such as foxtail, etc.

D. Each load of mulch shall be subject to inspection and acceptance by Engineer prior to unloading.

2.3 WETLAND FERTILIZER

A. Fertilizer shall be a standard commercial product which, when applied at the proper rate, will supply the quantity of total nitrogen (N) at a rate of thirty (30) pounds per acre for the lower portion of the subgrade treated in wetland areas.

B. Fertilizer shall be uniform in composition, liquid or dry, and shall be free flowing. Fertilizer may be delivered in bulk from the supplier or in its original unopened containers. Any fertilizer which becomes caked or otherwise damaged, making it unsuitable for use, will not be accepted.

PART 3 - EXECUTION

3.1 REACTION PERIOD

A. Both time and moisture are required for lime to neutralize acidic spoil material and for mulch to decompose. A delay period is required to enhance the benefit between the lime/mulch treatment and seeding operations. The length of the delay is dependent on many factors including lime and mulch properties, soil properties, and weather conditions. Contractor shall coordinate his work to achieve maximum delay time, perhaps as much as several months or over-winter, at no additional expense to Division. Contractor shall request approval of Division for when the seeding operations can begin.

3.2 TESTING

A. As the Contractor is nearing final grade in portions of the site to prepare for seeding, the Contractor shall contact and schedule soil sampling with the Engineer. The Engineer is to collect the samples, assisted by the Contractor, and submit them for testing.

1. Engineer and Contractor shall collect composite samples of not less than ten (10) well-distributed individual soil cores from any contiguous area of ten (10) acres or less. Soil cores shall be three-quarter (3/4) inch to one (1) inch diameter to a depth of about twelve (12) inches. Areas having observable differences in material types or surface conditions (soil types) shall be handled as different samples, even if less than (10) ten acres.

2. Engineer shall combine soil cores to form composite samples for each (10) ten acres of contiguous area and/or observable different soil types by mixing well and placing in sample bag to be sent to laboratory. (e.g. If total area is 30 acres and has two distinctly different soil types of 15 acres each, then there should be four (4) composite samples containing ten (10) soil cores each – two (2) composite samples from each soil type.)

B. Engineer shall deliver each composite soil sample to an approved soil testing laboratory. Each sample should be tested for the properties listed below. It should be noted by Contractor that test results for Item #3 below can often take four (4) weeks or longer to receive. The Engineer cannot be held responsible for delays in schedule due to Contractor scheduling of sampling or the time it takes for the laboratory to complete the tests.

1. pH
2. Buffer pH
3. Acid/Base Accounting based on pyritic sulfur with total sulfur

C. Engineer shall obtain liming recommendations to achieve a pH of 6.5 for spoil from the laboratory and submit the results to Division. The cost of all services required from the testing laboratory for initial liming recommendations shall be the responsibility of Engineer.

D. Soil test results and laboratory recommendations shall be used by Engineer and Division in determining the amount of lime to be applied. The final rate determined by Division and Engineer shall be applied by Contractor and this rate may be more or less than that recommended by the laboratory.

3.3 WETLAND AREAS

A. Subgrade Preparation

1. Engineer and Division shall approve the final grades in the wetland areas prior to incorporation of mulch and fertilizer materials by Contractor.

2. After final grade acceptance, Contractor shall excavate at least nine (9) inches of material below final grade in the constructed wetland areas as shown on the plans. This material shall be set aside to be replaced after this exposed layer has been treated.

B. Application for Undercut Area

1. Agricultural Lime –Agricultural lime (tons ECCE per acre) shall be applied at the same rate as that determined from the soil tests taken for the rest of the site.

2. Fertilizer – Nitrogen (N) shall be applied at a rate of thirty (30) pounds per acre.

3. Mulch – Mulch shall be applied at a rate of five (5) tons per acre.

C. Incorporation for Undercut Area

1. Contractor shall apply and incorporate the lime, fertilizer, and mulch into the exposed undercut area over the entire wetland areas as designated on the plans. The depth of incorporation shall extend at least nine (9) inches into the spoil material beneath the undercut level and shall be completed with an acceptable method as approved by the Engineer.

2. Application will not be permitted during adverse conditions, such as high winds, surface frost to a depth of greater than one (1) inch, excessive moisture in the surface to be treated, or if rain is predicted within the time Contractor estimates will be required for application and incorporation of the mulch and fertilizer within the approved wetland area(s).

D. Replacement of Undercut Material

1. After application and incorporation of lime, fertilizer, and mulch is complete in the undercut subgrade, Contractor shall replace the excavated material.

E. Application for Replaced Undercut Material

1. Agricultural Lime –Agricultural lime (tons ECCE per acre) shall be applied at the same rate as that determined from the soil tests taken for the rest of the site.

2. Fertilizer – Nitrogen (N) shall be applied at a rate of thirty (30) pounds per acre.

3. Mulch – Mulch shall be applied at a rate of five (5) tons per acre.

F. Incorporation for Undercut Area

1. Contractor shall apply and incorporate the lime, fertilizer, and mulch into the replaced material from undercut area over the entire wetland areas as designated on the plans. The depth of incorporation shall extend at least nine (9) inches into the spoil material beneath the undercut level and shall be completed with an acceptable method as approved by the Engineer.

3.4 LIME-MULCH APPLICATION

A. Application Rates

1. Agricultural Lime, Subgrade - Contractor shall plan to apply lime (tons ECCE per acre) at the rate as shown on the plans or listed in the Supplemental Specifications unless a different rate is specified based on the results of soil tests taken after rough grading is completed as described in Item 3.2.D. The application rate provided in these documents is based on limited information available and is for bidding purposes. Actual application rate will vary depending on the recommendation of the soil tests.

2. Mulch, Subgrade - Contractor shall apply mulch at a rate of five (5) tons per acre or as otherwise indicated in the Supplemental Specifications.

3. Weight Tickets - Weight tickets shall be provided to the Engineer to determine that the appropriate amount of lime and mulch has been applied prior to incorporation.

B. Incorporation

1. Contractor shall demonstrate to Engineer and Division on a small plot of one tenth (1/10) acre or more in size, the method and equipment which will be used to thoroughly mix the lime-mulch materials into the upper twelve (12) inches of spoil. When an acceptable method is agreed to by Engineer and Division, that method shall be used throughout the Project. Engineer and Division reserve the right to reject the method of incorporation as it progresses if the previously approved procedure stops obtaining the desired results.

2. Engineer and Division shall approve the final grades and the lime application rates based on the spoil test results prior to the application and incorporation of the lime and mulch materials by Contractor. Contractor shall request approval to initiate the lime-mulch application on areas of at least five (5) acres in size.

3. The inability or Contractor's lack of meeting the requirements of the Storm Water Pollution Prevention Plan (SWPPP) or the soil loss requirements stipulated in the Land Disturbance Affidavit (*Document P)* shall automatically be reason to require lime/mulch application, even if the affected area is less than ten (10) acres.

4. Contractor will obtain Engineer and Division's approval of site conditions prior to application of lime or mulch. Application will not be permitted during adverse conditions such as high winds, surface frost to a depth greater than one (1) inch, excessive moisture in the surface to be treated, or if rain is predicted within the time Contractor estimates will be required for application and incorporation of the lime-mulch within the area approved.

5. After receiving approval from Engineer and/or Division, Contractor shall evenly apply agricultural lime and mulch directly on the surface to be treated. Contractor shall incorporate the lime/mulch into the upper twelve (12) inches of material the same day the lime and mulch are applied, using the agreed upon method per B.1 above. Incorporation shall be done on the contour and compaction shall be kept to a minimum. This may require multiple passes in order to thoroughly mix both the lime and mulch through the upper twelve (12) inches.

C. Contractor shall use means necessary to prevent dust from becoming a nuisance to public, to neighbors, and to other work being performed on or near site.

D. No lime or mulch shall be applied on site if that load of lime or mulch is not accompanied by an appropriate weight ticket. All lime and mulch weight tickets for material applied on site shall be

submitted to the Resident upon arrival of the material on site. If Contractor applies lime or mulch prior to Resident receiving appropriate weight ticket for that material, or in the absence of the Resident, Division can require additional lime and/or mulch be applied to the site at Contractor's expense to assure that Contract specified amounts are met.

3.5 MEASUREMENT AND PAYMENT

Construction cost of all work included in this SECTION of the Construction Specifications shall be included in Contractor's unit prices set forth in Proposal and Schedule of Prices (*Document C*) for work items described below. Unit price for each of these several items shall include its pro rata share of overhead so that sum of products obtained by multiplying unit prices so set forth by amount of work actually constructed, measured as described herein, shall constitute full payment to Contractor for performance of work included in this SECTION.

Measurement and payment for each work item in this SECTION shall be in accordance with following:

A. *Agricultural Lime, Subgrade:* Contractor's unit price for limestone used in rough grade preparation work shall represent full payment for furnishing, delivery, application, and incorporation of lime in accordance with specifications. Submittals required under Item *1.5 Submittals* of this SECTION shall accompany each shipment of agricultural limestone for payment. Actual application rate will vary, pending recommendations of spoil tests conducted in accordance with Item *3.2 Testing*, of this SECTION. This pay item will also include lime placed on both the undercut and replaced material within the wetland areas.

   Measurement for payment purposes shall be actual number of tons of ECCE, based on a dry unit weight, applied by Contractor in complying with requirements of this SECTION.

B. *Mulch, Subgrade*: Contractor's unit price for Mulch, Subgrade shall represent full payment for all materials, application, mixing, plowing, disking, and all incidental work pertaining to incorporating the mulch with agricultural limestone as a part of the lime-mulch application. This pay item will also include mulch placed and incorporated into both the undercut and the replaced material within the wetland.

   Engineer will determine in acres, to the nearest one-tenth (1/10) acre, the actual area in which the mulch application has been completed. Contractor shall provide field measurements as required to show the limits of the area mulched. Engineer will determine in acres, to nearest one-tenth (1/10) acre, actual area that mulch application has been performed. Delivery receipts showing certified weight prior to placement will be used to confirm required tons per acre incorporation of mulch.

C. *Wetland Fertilizer:* Payment for fertilizer, Nitrogen (N), furnished, delivered, applied and incorporated into wetland areas, per requirements of this SECTION, shall be made in accordance with Contractor's unit prices for wetland fertilizer. Weigh tickets must accompany each shipment of fertilizer and shall form the basis for measurement and payment. Measurement for payment purposes shall be the actual weight to the nearest pound.

D. *Wetland Undercut and Replacement:* Contractor's unit price for wetland undercut and replacement shall constitute full payment for excavation of undercut material, stockpiling the material nearby, and replacement of the undercut material after the initial incorporation is complete and all other incidental work. Incorporation of the fertilizer, mulch, and lime shall be included in the cost of each of these items delivered to the site.

   The wetland undercut and replacement area will be based upon the areas as shown on the plans rounded to the nearest tenth (0.1) acre. Any field adjustments made will be measured jointly by Contractor and Engineer. The total area for payment is only counted once.

E. *Summary:* Proposal bid items applicable to work covered by this SECTION are as follows:

Description	Unit
Agricultural Lime, Subgrade	Ton (ECCE)
Mulch, Subgrade	Acre
Wetland Fertilizer	Pound
Wetland Undercut and Replacement	Acre

END OF SECTION 02400

INDEX

SECTION 02500 - FENCING

PART 1 - GENERAL

1.1 DESCRIPTION
1.2 QUALITY ASSURANCE
1.3 JOB CONDITIONS
1.4 SUBMITTALS
1.5 DELIVERY, STORAGE AND HANDLING

PART 2 - PRODUCTS

2.1 GENERAL
2.2 POSTS AND BRACING
2.3 FENCING
2.4 GATES AND HARDWARE

PART 3 - EXECUTION

3.1 PERFORMANCE
3.2 MEASUREMENT AND PAYMENT

PART 1- GENERAL

1.1 DESCRIPTION

A. Work Included

Work under this SECTION covers requirements for materials, tools, equipment and services necessary to complete installation of fence for this project. The work shall include, but is not necessarily limited to, completion of the following work:

1. Field engineering
2. Removal and salvage to landowners of existing fence
3. Installation of field fence
4 Installation of field gates

1.2 QUALITY ASSURANCE

A. Contractor shall use adequate number of skilled workmen who are thoroughly trained and experienced in the necessary crafts and who are completely familiar with the specified requirements and the methods needed for proper performance of the work in this Section.

B. Contractor shall use equipment adequate in size, capacity, and numbers to accomplish the work in a timely manner.

C. In addition to complying with requirements of governmental agencies having jurisdiction, Contractor shall comply with the directives of Engineer and Division.

D. Applicable Standards

1. American Society for Testing and Materials (ASTM)
   A 116: Zinc-Coated (Galvanized) Steel Woven Wire Fence and Brace Wire
   A 121: Zinc-Coated (Galvanized) Steel Barbed Wire

2. Iowa Department of Transportation (IDOT)

1.3 JOB CONDITIONS

A. Where existing fences are to be removed and subsequently replaced as a part of the work, Contractor shall field establish such reference points and ties as are necessary to ensure replacement fencing will follow the same alignment as existing fencing. If it is noted to salvage the fence to the landowner, then the existing fencing shall be carefully removed where noted on the Plans and salvaged as described in SECTION 02100 MOBILIZATION, SITE CLEARING, AND PREPARATION, Part 3.4. Also refer to paragraph 4-05 in both the General Conditions (*Document N*) and Special Conditions (*Document O*) for other requirements regarding existing and new fencing.

B. Where new gates are to be installed, Contractor shall provide two (2) twelve (12) foot, sixteen (16) gauge painted steel tubing gates and additional fencing as required to preclude unauthorized use of the property.

C. Where new fencing is located along property lines, all affected landowners and/or public agencies shall mutually agree on location of the new fencing. In the event the location of the new fencing cannot be agreed upon by all, the affected portion in contention shall not be installed.

D. In the event fencing is installed during or after seeding work in SECTION 02700 – SEEDING or SECTION 02800 - WETLANDS, Contractor shall exercise care not to damage the seedbed or seeded area. In the event of damage, redress, reseed, replant, and remulch as applicable.

E. Installation of some fencing may be impacted by the location of existing buried utilities. Contractor shall have all the utilities properly marked prior to installation of the fence and is responsible for any damage that may occur as a result of this work.

1.4 SUBMITTALS

A. Contractor shall submit the suppliers' certifications to Engineer that fencing, posts, gates and hardware meet the indicated specifications.

1.5 DELIVERY, STORAGE AND HANDLING

A. Contractor shall store and handle materials in accordance with applicable requirements of the General and Special Conditions and in accordance with the supplier's requirements.

PART 2 - PRODUCTS

2.1 GENERAL

A, Materials that are considered to be "standard products" of a manufacturer may be used when such products conform to the Specifications.

2.2 POSTS AND BRACING

A. Posts

1. Wood posts shall meet the requirements of IDOT Section 4154.07. Metal posts as shown on IDOT Type RC-8 Typical Plan are not allowed. Metal posts are only to be used at water crossings.

B. Steel Braces

1. Steel braces shall meet the requirements of IDOT Section 4154.08.

C. Brace Wires

1. Brace wires shall be two double strands of No. 9 wire twisted tight with a short stick or board which shall be left in place for future tightening. Bracing wire shall meet the requirements of IDOT Section 4154.05.

2.3 FENCING

A. Woven Wire

1. Woven wire fencing shall meet the requirements of IDOT Section 4154.02, and shall conform to ASTM A-116, Class 3 zinc coating. It shall be forty-seven (47) inches high with a fabric design meeting ASTM Design Number 1047-6-11.

B. Barbed Wire

1. Barbed wire shall be galvanized steel with a four (4) point pattern of round barbs spaced five (5) inches on center that meets the requirements of IDOT Section 4154.04. Note that

only a single top strand of barb wire is required. The bottom strand as shown on IDOT RC-8 Type 47 Fence is not to be installed.

C. Staples

1. Staples shall be hot-dipped galvanized and shall consist of either screw shank type (or equivalent) with a minimum length of one and one-quarter inches (1-1/4") or No. 9 plain wire with a minimum length of one and three-quarter inches (1-3/4"). All staples used shall meet the requirements of IDOT Section 4154.06.

2.4 GATES AND HARDWARE

A. All gates shall be comprised of twelve (12) foot panels. The panels shall be fabricated from rolled steel tubing with a diameter of two (2) inches and shall be shop painted. Single gates will have one (1) panel and double gates shall have two (2) panels.

B. Mounting hardware, including hinges and latches, shall be as recommended by the gate manufacturer for the particular site installation. Provide case hardened chain of suitable length to secure gate if not provided by manufacturer.

PART 3 - EXECUTION

3.1 PERFORMANCE

A. Contractor shall install fencing in accordance with these Construction Specifications and Plans.

B. All six (6) inch wood posts shall be set a minimum of forty-two (42) inches below grade. All four (4) inch posts shall be set a minimum of thirty (30) inches below grade. If post holes are bored, backfill around wood posts with tamped material from excavation or with concrete. Posts may be driven into the ground in lieu of boring post holes.

C. Contractor shall provide brace assemblies consisting of with steel braces and diagonal bracing wires to brace the wood posts at the following locations:

1. Points of connection to existing fence.
2. End posts.
3. Points of deflection in horizontal alignment exceeding ten (10) degrees.
4. Points of deflection in vertical alignment exceeding thirty (30) degrees.
5. On in-line sections exceeding five-hundred (500) feet, evenly spaced so as not to exceed five-hundred (500) feet.

D. Contractor shall stretch the woven wire fabric and barbed-wire on outside of posts on corners and curves.

E. Contractor shall attach woven wire fabric and barbed wire to each wood post with at least four (4) staples.

F. Contractor shall cut and tie off the woven wire fabric and barbed wire at all end posts and brace posts adjacent to corner and angle posts.

G. Contractor shall hand tension the woven wire fabric and barbed wire at all corner post assemblies from the brace post around the corner post to the other brace post.

H. All materials and installation procedures shall be similar to IDOT Standard Road Plan RC-8 Type 47 which is included in the Appendix for reference. Differences are noted in Items 2.2A and 2.3B of this SECTION.

I. Contractor shall install the gates and hardware in accordance with manufacturer's recommendations and secure with a chain unless another device is provided by manufacturer.

3.2 MEASUREMENT AND PAYMENT

The construction cost of all work included in this SECTION of the Construction Specifications shall be included in Contractor's unit prices set forth in the Proposal and Schedule of Prices (*Document C*) for the work items described below. The unit price for each of these items shall include its pro rata share of overhead so that the sum of the products obtained by multiplying the unit prices so set forth by the amount of the work actually constructed, measured as described herein, shall constitute full payment to Contractor for performance of the work included in this SECTION of the Constructions Specifications or on the Plans, including field engineering.

Measurement and payment for each work item in this SECTION shall be in accordance with the following:

A. *Field Fence:* New fencing shall be paid for at the unit price per linear foot, rounded to the nearest foot, for fencing furnished and installed according to the Plans and as specified herein. Only new fencing as shown on the Plans shall be measured for payment. Any existing fencing otherwise removed and replaced by Contractor, whether replaced with salvaged fencing or with new fencing, shall not be measured for payment. The length of fence approved for payment will be jointly measured in the field by Contractor and Engineer.

B. *Single Gate:* Single gate and all gate hardware shall be paid for at the unit price for each single gate furnished and installed in accordance with this SECTION.

C. *Double Gate:* Double gate and all gate hardware shall be paid for at the unit price for each double gate furnished and installed in accordance with this SECTION

D. *Summary:* Proposal Bid Items applicable to work covered by this Section are as follows:

Description	Unit
Field Fence	Lineal Foot
Single Gate (1 – 12 foot panel)	Each
Double Gate (2 – 12 foot panels)	Each

END OF SECTION 02500

INDEX

SECTION 02700 - SEEDING

PART 1 - GENERAL

1.1 DESCRIPTION
1.2 QUALITY ASSURANCE
1.3 JOB CONDITIONS
1.4 SUBMITTALS
1.5 DELIVERY, STORAGE, AND HANDLING
1.6 SITE DISTURBANCES

PART 2 - PRODUCTS

2.1 AGRICULTURAL LIME
2.2 FERTILIZER
2.3 MULCH
2.4 SEED
2.5 LEGUME SEED INOCULANT

PART 3 - EXECUTION

3.1 INITIAL PREPARATION
3.2 TESTING – ACID/BASE ACCOUTING
3.3 TESTING - FERTILITY
3.3 SEEDBED PREPARATION
3.4 LIMING AND FERTILIZING
3.5 SEEDING
3.6 MULCHING
3.7 MAINTENANCE
3.8 MINIMUM REQUIREMENTS FOR ACCEPTANCE
3.9 MEASUREMENT AND PAYMENT

PART 1 - GENERAL

1.1 DESCRIPTION

A. Work under this SECTION covers requirements for materials, tools, equipment and services necessary to complete the herbaceous seeding of all areas disturbed during construction of this project. The work shall include, but is not necessarily limited to, completion of the following work:

1. Preparation of seedbed
2. Testing surface materials for lime and fertilizer application rates
3. Applying lime, fertilizer, and seed
4. Applying mulch
5. Applying erosion control mat if specified
6. Temporary fencing if required
7. Field engineering

1.2 QUALITY ASSURANCE

A. Qualifications of Workers: Provide at least one person who shall be present at all times during execution of this portion of the work and who shall be thoroughly familiar with the type of materials being installed and the best methods for their installation and who shall direct all work performed under this SECTION.

B. All seed shall meet or exceed requirements contained in specifications of this SECTION and Federal, State and County laws requiring inspection for plant disease and insect control and shall be labeled and certified in accordance with U.S. Department of Agriculture Rules and Regulations under the Federal Seed Act and Iowa State laws. All seed must be dated for test and be from the last season prior to date of delivery.

C. Lime Materials shall be a Standard Ground Agricultural Limestone which meets current requirements of the Iowa Department of Agriculture and Land Stewardship as prescribed under the Iowa Agricultural Limestone Act.

D. Fertilizer shall be a commercial grade fertilizer and shall meet standards for grade and quality as per the requirements of the Iowa Department of Agriculture and Land Stewardship.

E. Mulch shall meet the requirements of PART 2 PRODUCTS of this SECTION. Contractor shall identify to Engineer the locations from which the straw mulch was obtained and prove weight.

F. Inoculants used for treating legume seed shall be pure culture of nitrogen-fixing bacteria prepared specifically for the legumes specified in PART 2 PRODUCTS of this SECTION. Inoculant containers must be clearly marked by the manufacturer for each specified species and have an expiration date.

G. Engineer reserves the right, at any time, to sample all materials for testing to determine compliance with the requirements of this SECTION.

1.3 JOB CONDITIONS

A. Areas to be seeded include all project areas disturbed by excavation, grading and other construction procedures required for the completion of this contract.

B. Seeding shall be performed only during the seasons specified. The planting operation shall not be performed during times of drought, excessive moisture, or other unfavorable climatic conditions.

C. Prior to the work of this SECTION, carefully inspect the installed work of all other trades and verify that all such work is complete to the point where this installation may properly commence.

D. Do not proceed with installation in areas of discrepancy until all such discrepancies have been fully resolved.

E. Prior to permanent seeding, the waiting period as determined by Division will be required after the lime and mulch has been applied to sites where no cover material is available. This waiting period is necessary to allow the lime-spoil reaction to occur, providing a suitable environment for vegetation. The waiting period has traditionally been ninety (90) days.

1.4 SUBMITTALS

A. Certificates and Receipts

1. Certification shall be submitted to Engineer that all seed to be used is in compliance with the following:

   a. The Federal Seed Act.
   b. Iowa Department of Agriculture & Land Stewardship regulations.
   c. Species type and pounds of pure live seed (PLS) certification.
   d. Date and results at germination and purity tests.
   e. Test date to determine the percentages of germination and purity have been completed within a nine (9) month period, exclusive of the calendar month in which the test was completed.
   f. The seed analysis on the label shall be mechanically printed.

2. Suppliers certification of Effective Calcium Carbonate Equivalent (ECCE) content per ton of material must be submitted to and approved by Engineer prior to initial applications and subsequently as requested by Engineer. Necessary information shall include:

   a. Name and location of supplier.
   b. Name and address of agency and/or laboratory making ECCE determination.
   c. Clear identification of stockpile from which limestone is obtained.
   d. Date of last ECCE test and those for the previous four (4) tests on which ECCE is based.
   e. Receipts stating weight of material on each truck which arrives on site.

3. Fertilizer delivered in bulk shall be accompanied by the suppliers' certification of analysis and weight for each shipment made to the job site. Fertilizer delivered in individual containers shall be sealed and clearly marked for analysis and weight.

4. Contractor shall supply verification of the weight of mulch delivered to the job site in a method satisfactory to Engineer.

5. Inoculants delivered to the job site must be clearly identified and marked with expiration dates.

B. Testing - Contractor shall submit to Engineer and Division the results of all tests for specified lime and fertilizer recommendations prior to application.

C. Laboratory - Contractor shall select a soil testing laboratory for use on the seeding work and submit the name, address and telephone number for approval by Engineer at least sixty (60) calendar days prior to sampling time.

1.5 DELIVERY, STORAGE, AND HANDLING

A. Store and handle materials in accordance with the General Conditions and the Special Conditions.

B. Storage of all materials on the job site must be approved in writing in advance by Engineer.

C. Any materials approved for storage on site which, in the opinion of Engineer or Division, are being degraded due to storage must be removed and replaced at no additional cost to Division.

D. Use all means necessary to protect materials from the elements during delivery, handling and storage.

E. Deliver packaged materials (seed, etc.) to site in supplier's original unopened containers; each container to bear certification as specified. Pure live seed (PLS) certification shall be attached to all seed containers and shall not be removed except by Engineer.

F. At no time shall seed materials or inoculants be stored outside of the specified planting periods. Inoculants shall be stored in a cool place, away from heat. Partially used packages of inoculant shall be tightly resealed.

G. Store packaged materials off ground and protect from moisture. Moisture damaged materials are unacceptable. Wet, moldy or otherwise damaged seed is unacceptable.

1.6 SITE DISTURBANCES

A. Take precautions to insure that equipment and vehicles do not unnecessarily disturb or damage existing grading, other site improvements, or adjacent areas to the work.

B. Repair any damage and return site and adjacent areas disturbed by Contractor's operations to original condition at no cost to Division.

PART 2 - PRODUCTS

2.1 AGRICULTURAL LIME

A. Agricultural lime shall be ground calcitic limestone conforming to the current requirements of the Iowa Department of Agriculture and Land Stewardship. The lime shall have a minimum fineness of fifty five percent (55%) and shall contain not less than 1000 pounds ECCE per ton of lime to be applied.

B. If lime containing not less than 1000 pounds ECCE per ton is not locally available, Contractor may submit a proposal for use of equivalent material based upon the minimum pounds required of ECCE per acre.

C. Lime sludges salvaged from water treatment plants or other industrial operations shall not be approved as a substitute for agricultural lime.

2.2 FERTILIZER

A. Inorganic fertilizer shall be a standard commercial product which, when applied at the proper rate, shall supply the quantity of total nitrogen (N), available phosphoric acid (P_2O_5), and soluble potassium (K_2O) as specified herein.

B. Inorganic fertilizer shall be a commercial balanced fertilizer, uniform in composition, liquid or dry and free flowing. Fertilizer may be delivered bulk from the supplier or in its original unopened containers. Any fertilizer which becomes caked or otherwise damaged, making it unsuitable for use, will not be accepted.

2.3 MULCH

A. Mulch materials shall consist of wheat, oats, rye, hay, grass cut from native grasses or other plants approved in writing by Division.

B. Mulch shall be of air dry straw that has been properly cured and harvested. Mulch harvested after a killing frost or during dormant periods will not be acceptable. Mulch shall not be rotted, brittle, moldy, caked or otherwise degraded.

C. Mulch shall be free of noxious weeds as published by the local County Weed Commissioner and other weeds deemed undesirable by Engineer, such as foxtail, etc.

D. Each load of mulch shall be subject to inspection and acceptance by Engineer prior to unloading.

E. At least fifty percent (50%) of the salvage weight of each mulch bale shall contain mulch with a length of ten (10) inches or greater. This requirement shall apply to all mulch intended for crimping into the sown seedbed.

2.4 SEED

A. Seed delivered to the job site shall be labeled according to the U.S. Department of Agriculture Federal Seed Act and shall be furnished in containers with tags showing seed mixture, purity, germination, weed content, name of seller, and date on which seed was tested.

B. Moldy seed or seed that has been damaged in storage shall not be used. Seed that is more than one growing in ages shall not be used.

C. Seed Mixture: Seed mixtures shall consist of the varieties, mixtures and application rates by pound pure live seed (PLS) per acre as stated in the Supplemental Specifications and as determined below:

$$\text{Pure Live Seed per pound (PLS/lb)} = \frac{\text{(\% purity)}}{100} \times \frac{\text{(\% germination)}}{100}$$

$$\text{Actual pounds of seed per acre} = \frac{\text{lbs PLS per acre}}{\text{(PLS)/lb.}}$$

2.5 LEGUME SEED INOCULANT

A. Inoculant for treating leguminous seed shall be a pure culture of nitrogen-fixing bacteria, specific for the seed species to be inoculated. Containers shall be plainly marked with the expiration date for use and manufacturer's directions for inoculating seed.

B. Methods of inoculation shall conform to manufacturer's recommendations for the particular species of legume.

C. Inoculants shall be applied at double the manufacturer's recommendation.

D. Use sufficient inoculant to cover all leguminous seed before mixing with other seeds. Seed shall be slightly moistened or a sticker shall be used to ensure the inoculant adheres to the seed. The time lapse for sowing seed following inoculation shall not exceed 24 hours.

PART 3 - EXECUTION

3.1 INITIAL PREPARATION

A. Except in the case of temporary seeding, the required lime/mulch treatment specified in Section 02400 - SUBGRADE PREPARATION, WITHOUT COVER MATERIAL or 2410 – SUBGRADE PREPARATION, WITH COVER MATIERAL shall have been performed and completed prior to initiating work of this Section in any area.

B. Areas of the site that do not have cover material shall also have had the waiting period completed as determined by Division.

C. Any wetland or pond areas with pooled water levels above the specified seeding elevations for wetland seeding shall be lowered as needed at no additional cost to Division.

3.2 TESTING – ACID/BASE ACCOUNTING

A. These tests are only needed if the site does not have cover material. Sites with cover material do not need this additional testing. At least one month after the lime and mulch as discussed in SECTION 02400 – SUBGRADE PREPARTION, WITHOUT COVER MATERIAL has been applied, an additional set of samples shall be taken for Acid/Base Accounting. These samples can also be used for fertility testing. Contractor shall contact and assist Engineer with collection samples of finish subgrades for testing for lime recommendations.

1. Engineer and Contractor shall collect not less than ten (10) well-distributed individual samples from any contiguous area of ten (10) acres or fraction thereof. Samples shall consist of three-quarter (3/4) inch to one (1) inch diameter corings to a depth of about twelve (12) inches. Areas having observable differences in material types or surface conditions shall be sampled separately.

2. Engineer shall combine individual samples to form composite samples. Where observable differences are noted, the similar soil types from adjacent areas shall be combined as needed into separate samples. If observable differences are not noted, then combine all ten (10) individual samples into one (1) composite sample.

B. Engineer shall deliver each composite soil sample to an approved soil testing laboratory. Each sample should be tested for the properties listed below. It should be noted by Contractor that test results for Item #3 below can often take two (2) weeks to four (4) weeks to receive.

1. pH
2. Buffer Ph (Buffer Index)
3. Acid/Base Accounting based on pyritic sulfur with total sulfur

C. Engineer shall obtain liming recommendations to achieve a pH of 6.5 for spoil from the laboratory and submit the results to Division.

D. Soil test results and laboratory recommendations shall be used by Engineer and Division in determining the amount of lime to be applied. The final rate determined by Division and Engineer

shall be applied by Contractor and this rate may be more or less than that recommended by the laboratory.

3.3 TESTING – FERTILITY

A. Contractor shall collect samples of finish grades as specified below for testing provided all of the initial preparations are completed. Engineer **must** be present when samples are collected to prepare a sample location plan. The samples shall be submitted to laboratory to determine lime and fertilizer recommendations.

1. Collect not less than ten (10) well-distrubuted, individual samples from any contiguous area of 10 acres or fraction thereof. Samples shall be three-fourths (3/4) inch to one (1) inch diameter corings to a depth of six (6) inches. Areas having observable differences in material types or surface conditions shall be sampled separately.

2. Combine individual samples to form one (1) composite sample for each contiguous area sampled.

B. Deliver each composite soil sample to the approved soil testing laboratory. Deliver samples for testing six (6) to eight (8) weeks prior to the beginning of the specified planting period. A shorter lead time may be possible depending on the laboratory. Test each composite sample for:

1. pH
2. Buffer pH (Buffer Index)
3. Cation Exchange Capacity (CEC)
4. Phosphorus - Bray I (P_1 weak Bray) with recommendations
5. Exchangeable Potassium with recommendations

C. Obtain liming and fertilization recommendations from the laboratory for the appropriate grass mix for each area. Recommendations from the lab shall include rates for applying lime, phosphorus, and potassium.

D. Submit test results and laboratory recommendation to Engineer and Division for review at least one (1) week prior to scheduled date for application of lime and/or fertilizer.

E. Soil test results and laboratory recommendations shall be used by Engineer in determining the amounts of lime and fertilizer to be applied. Engineer's and Division's final rates shall govern and these rates may be more or less than those recommended by the laboratory.

F. Cost of all services required from the testing laboratory for fertility shall be the responsibility of Contractor.

3.4 SEEDBED PREPARATION

A. Dispose of any growth, rocks, or other obstructions which might interfere with tilling, seeding, or later maintenance operations. Dispose of clods, rocks and other objects which are six (6) inches or greater in diameter.

B. Till all areas to be seeded by disking or other approved method; thoroughly loosen and pulverize the soil to a depth of six (6) inches. This may require multiple passes of the disk or other approved equipment. This entire operation shall be considered the **first disking**. Lime and fertilizer shall not be incorporated during the first disking operation.

C. After application of lime and fertilizer (see Item 3.4 *Liming and Fertilizing* below), redisk the site as described above. Multiple passes may be required. This entire operation shall be considered the **second disking** operation.

D. Harrow the site until the condition of the seedbed is suitable for seeding. The harrow shall be set to achieve the desired result. This may require manually resetting the teeth to a greater depth, weighting the harrow, removing extension arms on either side of the main frame, a combination of the above, or other modifications. In lieu of harrowing, or if the harrow is not producing the desired result, redisk the area until the condition of the seedbed is suitable for seeding. This entire operation shall be considered the **third disking** operation.

E. After the third disking operation, and prior to seed application, firm the seedbed with a cultipacker or similar piece of equipment. Cultipacking shall continue until such time as a finely pulverized and firmly compacted seedbed is obtained and accepted by Engineer. The seedbed shall be cultipacked again following completion of seeding to ensure adequate seed-soil contact.

F. Maintain the seedbed until seeded and mulched to provide a smooth area with no rills or eroded areas. Repair and restore prepared seedbed if eroded or otherwise disturbed.

G. Throughout seedbed preparation activities, disking, harrowing and other operations may expose rocks, boulders, rubbish, debris, etc. During and/or upon completion of each disking and harrowing operation, and prior to continuing with the next operation, pick up all debris, rubbish, etc., remove or bury all boulders, and pick up all rocks that hinder seedbed preparation or will impede seeding the site or mechanical mowing of the reclaimed site. Dispose of rocks and boulders in locations as approved by Engineer. Dispose of debris, rubbish, etc. by burying on site or hauling to an approved landfill.

H. Contractor shall not perform seedbed preparation when ground conditions are unsuitable due to excessive moisture, snow, frost, or frozen ground , as determined by Engineer or Division.

3.5 LIMING AND FERTILIZING

A. Agricultural lime, nitrogen (N), phosphorus (P), and potassium (K) shall be applied to all areas to be permanently seeded, and shall be incorporated by disking into the top six (6) inches of the prepared seedbed. Areas to be temporarily seeded shall only be required to have nitrogen incorporated.

B. Lime and fertilizer shall be incorporated separately or simultaneously, depending upon the timing of product delivery and application.

1. **Lime:** The lime shall be applied and incorporated no less than one (1) week prior to seeding. Once applied, it shall be incorporated within a period of time which will avoid losses due to wind or rain.

2. **Fertilizer:** The fertilizer must be applied and incorporated no more than one (1) week prior to seeding. Once applied, it too shall be incorporated within a period of time which will avoid losses due to wind or rain.

3. If lime and/or fertilizer is applied but not yet incorporated, and Engineer or Division believes significant loss of lime and/or fertilizer has occurred due to bad weather, Engineer or Division may then require Contractor to reapply lime, fertilizer, or both, as applicable, at the rates and in the areas of the site so directed by Engineer and Division, at no additional cost to Division.

4. Incorporation of lime and fertilizer, whether done separately or simultaneously, shall be considered the second disking operation (see Item 3.3 *Seedbed Preparation*, D above). Once the lime and fertilizer have both been applied and incorporated, continue seedbed preparation as described in 3.3 *Seedbed Preparation*.

C. The application rate of agricultural limestone shall be based upon results of soil test conducted in Item 3.2 *Testing* in this SECTION. For bidding purposes, it is estimated that the rate provided on the plans or in the Supplemental Specification shall be applied.

D. Nitrogen (N), Phosphorus (P) and Potassium (K) fertilizer shall be applied to permanent cover seeding at a rate determined by the results of the soil testing in Item 3.2 TESTING, in this SECTION. For bidding purposes, the rates provided on the Plans or in the Supplemental Specification shall be applied.

3.6 SEEDING

A. All permanent seeding shall be completed within the seeding season dates shown below. Temporary seeding shall be completed at any time where weather will promote vegetation growth.

Spring	April 1 - May 15
Fall	August 15 - September 15
Dormant	November 15 to Freeze Up

B. If contractor foresees that seeding cannot be completed within the specified seeding seasons, he shall submit a written request for a seeding date extension to Division. All seeding completed outside of approved seeding dates is at Contractor's risk. Any repairs and reseeding that becomes necessary as a result of work completed outside the approved dates shall be completed by contractor at no cost to Division.

C. General Requirements

1. As weather and site conditions permit, within the specified seeding season, seed site areas as shown on the Plans and all other disturbed areas.

2. When conditions are such that less than satisfactory results are likely to be obtained by reason of drought, excessive moisture, snow, or frozen soil, seeding work shall be halted and resumed only when conditions are favorable or when approved alternative or corrective measures and procedures have been affected.

3. Proceed with seeding work as rapidly as portions of the site become available within seasonal limitations. In any event, seeding shall be accomplished before the prepared seedbed becomes eroded, crusted over, or dried out and shall not be conducted when the ground is frozen or snow covered. Should seeding not be accomplished prior to the prepared seedbed becoming eroded, crusted over, or dried out, or the ground becomes snow covered or frozen, Engineer or Division shall require Contractor to rework the seedbed as necessary prior to seeding at no cost to Division.

4. Schedule permanent seeding such that mulching of seeded areas takes place no later than forty-eight (48) hours after seeding partial areas. The time period between seeding and mulching shall be shortened if it appears adverse weather conditions could either cause damage to the seeded area or delay the timely application of mulch. If, prior to mulching, the seeded area is damaged by adverse weather, or success of the seeding is in doubt due to Contractor's failure to apply mulch in a timely manner, the seedbed or the area so affected shall be reprepared and the area reseeded, all at no additional compensation. Reapplication of lime, fertilizer, or both may also be required depending on Engineer's or Division's opinion of the severity of damage due to weather or, in the case of fertilizer, on the time lapse between initial fertilizer application and reseeding. Reapplication of lime and/or fertilizer, if required by Engineer or Division, shall also be done at no cost to Division.

D. Permanent Seeding

1. Seed all areas to be seeded with the appropriate seed mix as shown on the Plans. Seed shall be applied at the rates previously described in this Section. Sow seed with the contour using a grassland or rangeland drill set for the specified seeding rates. The drill shall be equipped with double coulter furrow openers. The drill shall be subject to acceptance by Engineer. Drill seeding shall be accomplished with drills set at no more than six (6) inches apart. Overlap each successive seeding pass to ensure complete coverage. Upon a show of green, bare areas will be reseeded at no additional cost to Division.

2. Embed the seed at a depth recommended for the species.

3. Broadcasting by centrifugal-type or hydroseeder broadcasters, or by hand shall also be allowed in areas not accessible to drills or other equipment, and may be allowed for correction or bare spots. Once broadcast, the seed must be covered with soil to a depth recommended for the species.

4. Upon completions of the seeding operation, cultipack the seedbed to provide a positive seed-soil contact. If the drill seeder is equipped with an approved cultipacker or press wheels, separate operations shall not be necessary. The type of cultipacker/seeder to be used shall be subject to acceptance by Engineer.

3.7 MULCHING

A. Mulch shall be applied immediately to all areas sown to permanent or temporary seed, except areas receiving erosion control mat.

1. Mulch shall be uniformly applied at the rate of three (3) tons per acre. The mulch may be spread either by hand or by mechanical spreader. When spread by hand, it shall be torn from the bale, "fluffed up" and spread uniformly over the area. When spread by mechanical spreader, the machine shall be adjusted to prevent cutting the mulch into pieces shorter than six (6) inches and to provide uniform distribution of the mulch over the area. The mulch, when applied, shall provide a uniform cover.

2. After application, the mulch shall be anchored into the soil by crimping into the soil with a mulch tiller to a minimum depth of two (2) inches. Anchoring shall be accomplished by using a mulch tiller with rolling coulter type disk which shall be sufficiently dull on the cutting edge to prevent cutting the mulch. The disk must be of sufficient diameter to prevent the frame of the mulch tiller from dragging the mulch. The number of passes over the mulch shall not exceed two (2).

3. The mulch shall not be covered with excessive amounts of soil. The rows or furrows made by the straw mulch crimping equipment (mulch tiller) shall be spaced not more than nine (9) inches apart.

4. All straw mulching operations shall be done on the contour. The spreading and anchoring will be so scheduled and performed progressively so that wind damage will be held to a minimum as approved by Engineer.

3.8 MAINTENANCE

A. Protection of Seeding

1. Vehicular traffic on areas seeded with temporary or permanent seeding, shall be restricted to travel necessary to establish seeding and other travel approved by Engineer.

2. Protect seeded areas from damage due to operations of other contractors and trades, and trespassers. Maintenance shall commence immediately following seeding operations and shall continue until Division has issued final acceptance of the project. Repair or replace damaged areas.

B. Reconditioning Existing Areas

1. Contractors equipment, project materials, and wastes such as oil drippings, stones, gravel, packaging containers, etc., shall be removed from the site or disposed of in a manner approved by Engineer and Division.

2. All disturbed areas including areas outside grading limits, such as entrance and haul roads, shall be reconditioned and planted according to this specification.

C. Repairs

1. Repair all areas of rill erosion with a depth of greater than three (3) inches and width greater than four (4) inches.

2. Repair defects in vegetation having individual bare areas greater than one (1) square foot or total bare areas exceeding two percent (2%) of the entire vegetated area.

3. The costs of materials and labor for repairs are at no additional cost to Division.

3.9 MINIMUM REQUIREMENTS FOR ACCEPTANCE

A. Ninety (90) days following evidence of plant growth or greenup, Division, Engineer, and Contractor shall inspect and evaluate the seeded areas for acceptance based on the criteria listed below.

B. The plant growth shall provide a minimum of seventy-five (75%) cover over the seeded area. Areas failing to meet this cover density shall be interseeded or reseeded and mulched as required by Engineer and Division, at no cost to Division.

C. All plants included in the seed mixture must be present in the vegetation stand growing on site. If a species is nearly or totally absent from the vegetation stand, Engineer and Division and require Contractor to interseed the missing species at no cost to Division.

D. Areas of suspected hot spots shall be soil tested by Engineer or Division to determine if the failure of the seeding to meet acceptance criteria is due to low pH conditions. Engineer and Division may require Contractor to lime, fertilize, seed, and mulch these areas. Any additional work required in confirmed hot spot areas shall be paid for by Division at the appropriate bid item cost for each work item.

E. Following repair of defects, unaccepted areas, and reseeding of hot spot areas, the repaired areas will again be inspected ninety (90) days after evidence of plant growth or greenup. These areas shall be evaluated using the criteria listed in this Section.

F. In the event that in either the original seeding, repair seeding, or reseeding of hot spots it is found that the work, materials, or seedbed preparation failed to meet the quality or application rates specified, additional work shall be required at no cost to Division.

3.10 MEASUREMENT AND PAYMENT

The construction cost of all work included in this SECTION of the Construction Specifications shall be included in Contractor's unit prices set forth in the Proposal and Schedule of Prices (*Document C*) for the work items described below. The unit price for each of these several items shall include its pro rata share of overhead so that the sum of the products obtained by multiplying the unit prices so set forth by the amount of the work actually constructed, measured as described herein, shall constitute full payment to Contractor for performance of the work included in this SECTION.

Measurement and payment for each work item in this SECTION shall be in accordance with the following:

A. *Agricultural Limestone, Seeding:* Contractor's unit price for limestone used in permanent seeding work shall represent full payment for the furnishing, delivery, application and incorporation as per these specifications. The actual application rate will vary pending the recommendation of soil tests conducted in Item 3.1 *TESTING* in this SECTION.

   Measurement for payment purposes shall be the actual number of tons of effective calcium carbonate equivalence (ECCE) applied by Contractor in complying with requirements of this SECTION. Weight tickets must accompany each shipment of agricultural lime and shall form the basis for measurement and payment.

B. *Nitrogen (N), Phosphorous (P), and Potassium (K):* Payment for all fertilizer furnished, delivered, applied and incorporated into seedbeds, per requirements of this SECTION, shall be made in accordance with Contractor's unit prices for Nitrogen, Phosphorous and Potassium. The actual application rates for Phosphorous (P) and Potassium (K) will vary pending results of soil tests conducted in Item 3.1 TESTING in this SECTION. The cost of soil testing for Phosphorus and Potassium application rates shall be included in Contractor's unit prices. The cost of nitrogen for temporary seeding shall be measured or paid for as part of the cost of implementing the Storm Water Pollution Prevention Plan.

   Measurement for payment purposes shall be the actual weight to the nearest pound of each of the fertilizer components described.

C. *Seeding:* Contractor's unit prices for Permanent and Wetland Seeding shall represent full payment for the planting of all permanent seeded areas in accordance with requirements of this SECTION. Said unit price shall include the furnishing of all seed materials, soil testing, seedbed preparation, inoculants, planting of seeds, and mulching, including all required equipment labor and any required reseeding to complete all permanent seeding as specified herein.

   Measurement for payment purposes shall be the area seeded in acres, rounded to the nearest one-tenth (1/10) acre. Contractor shall provide field measurements as required to show the limits of the seeding. Engineer will determine in acres, to the nearest one-tenth (1/10) acre, the actual area that seeding has been performed, based on Contractor's field measurements. In lieu of field measurements, Contractor may request acceptance of plan (bid) quantity in accordance with 7-01 of the Special Conditions (Document O). Payment for seeding shall be made only after all submittals have been approved as required under this SECTION. Seeded areas outside the Project Limits will not be measured for payment. No separate measurement and payment apply to overseeding; the cost of overseeding shall be subsidiary to seeding.

D. *Mulch, Seeding:* Contractor's unit price for mulch shall represent full payment for mulching in accordance with requirements of this SECTION 02700 – SEEDING. Said unit price shall include the furnishing and application of all straw mulch, including all required equipment and labor to complete the work as specified herein. Payment for mulch shall be made only after all submittals have been approved as required under this SECTION 02700 - SEEDING. Payment will not be made on total site acreage if not substantiated by adequate weigh tickets.

Measurement for payment purposes shall be by the acre which shall be identical to the area as measured and approved for permanent seeding, above waterline seed, and shallow wetlands.

E. *Summary*: Proposal Bid Items applicable to work covered by this SECTION are as follows:

Description	Unit
Agricultural Lime, Seeding	Ton (ECCE)
Nitrogen (N)	Pound
Phosphorus (P)	Pound
Potassium (K)	Pound
Permanent Seeding	Acre
Wetland Seeding – Above Water Line	Acre
Mulch, Seeding	Acre

END OF SECTION 02700

SUPPLEMENTAL CONSTRUCTION SPECIFICATIONS

SUPPLEMENTAL SPECIFICATIONS

GOFF RECLAMATION PROJECT - CONTRACT #3

EXPLANATION

A. The purpose of this Section of the Specifications is to provide supplemental information to complete the Division's Standard Specifications, and to set forth supplementary requirements, modifications and/or deletions to make the whole of the Construction Specifications project specific.

B. References to Section, Paragraph and Sub-paragraph numbers used in these Supplemental Specifications are intended to coincide with reference numbers for corresponding Sections, Paragraphs and Sub-paragraphs in the Division's Standard Specifications.

C. Where there is any variance between the Standard Specifications and these Supplemental Specifications, the Supplemental Specifications shall take precedence.

D. Where any section of the Standard Specifications is modified, or any Paragraph, Sub-paragraph or Clause thereof is changed or deleted by these Supplemental Specifications, the unaltered provisions of that Section, Paragraph, Sub-paragraph or Clause in the Standard Specifications shall remain in effect. Unless these Supplemental Specifications make specific reference to the modification or deletion of a Paragraph, Sub-paragraph or Clause in the Standard Specifications, no changes are intended and paragraphs contained in these Supplemental Specifications are intended only to supplement, amplify, or clarify said Standard Specifications.

SECTION 02000 - SUBSURFACE INVESTIGATIONS

1.1 DESCRIPTION

A. The approximate locations of soil and water sampling points are shown on the Plans, Drawings 7-12, with field and laboratory test results in Appendix A and on Drawing 16.

SECTION 02010 – FIELD ENGINEERING

3.3 POSITION, GRADIENT, AND ALIGNMENT

E. The following are specific staking requirements deemed necessary by Engineer; they are not, however, meant to limit or satisfy Contractor's needs for its proper prosecution of the entire work.

1. Set ends of new fence runs (Northwest Area at start of construction, Southwest Area at end of construction). For Southwest Area, also set stakes at approximate mid length for two (2) interior brace panels (one (1) in fence run east of proposed gate and one (1) in fence run west of proposed gate).

2. Set clearing/project limits to lines provided to Surveyor by Engineer. In Northwest Area, no stakes needed along Goff Draw riprap ditch or new construction access road. In Southeast Area, no stakes required along existing construction access road or along orange pipeline. In Southwest Area, no stakes required along Oregon Drive or along existing access road at eastern project limits.

3. Set detention terrace high points and low points (risers). Set diversion terrace ends and mid points.

4. Set stakes for new pipes to establish ends of runs, location of concrete risers, and grades.

5. Set overflow elevations for outlet control barriers.

6. Set stakes for grading site per paragraph 3.6 below.

3.4 FINAL PAY QUANTITY SURVEYS

C. Contractor shall provide a final pay quantity survey which shall include a determination of actual quantities for all bid items except lump sum items. All bid items measured by weight must be substantiated by weight tickets furnished to Engineer. All bid items measured by length shall be taped in the field jointly by Contractor and Engineer. All bid items measured by the number of each unit installed shall be counted in the field by Contractor, accompanied by Engineer. All bid items measured by area, except those measured in acres, shall be measured in the field jointly by Contractor and Engineer. All bid items measured by the acre or cubic yard, except Grout, shall be surveyed by Contractor-retained personnel. In lieu of a survey for volume or area items, Contractor may request that Division accepts plan (bid) quantities for certain items (see E. below).

D. In the event surveying is performed for an item to be measured by volume or area, it shall be performed in the presence of Engineer, after said item is complete in place. Surveying shall be performed by a licensed surveyor or licensed professional engineer retained by Contractor. Final quantities used for payment purposes which rely on surveying shall be certified by the licensed surveyor or licensed professional engineer. For all surveyed items, submit the data as required in the Construction Specifications. For items measured by the acre, submit to Engineer a drawing to scale showing the limits of the measured item, with area calculations performed and certified by the licensed surveyor or licensed professional engineer.

E. In lieu of formal surveys, Contractor may wish to request that Division accepts plan (bid) quantities for certain bid items. Bid items which can be considered for acceptance of plan (bid) quantities include:

Bid Item 2	Clearing & Site Preparation (acre)
Bid Item 10	Turf Reinforcing Mat (square yard)
Bid Item 12	Strip, Stockpile, Respread (cubic yard)
Bid Item 13	Excavation (cubic yard)
Bid Item 14	Outlet Control Barrier (cubic yard)
Bid Item 17	Filter Fabric (square yard)
Bid Item 32	Mulch, Subgrade (acre)
Bid Item 40	Seeding – Site Mix (acre)
Bid Item 41	Seeding – Wetland Mix (acre)
Bid Item 42	Mulch, Seeding (acre)

F. In the event Contractor wishes Division to accept plan (bid) quantities for any item, he shall submit a request to Engineer and Division. If Division does not agree to plan quantities, Contractor shall then be required to furnish a measurement or survey as described above for any item not so approved. In evaluating Contractor's request to accept plan quantities, Division and Engineer will consider whether or not Contractor has performed the specified work to the full intent of the Contract and has completed grading in general conformance to the Plans.

G. Bid Item 4, Surface Roughening, and Bid Item 5, Temporary Seeding, are also measured and paid by the acre. Though these two (2) bid items are not eligible for requesting acceptance of plan (bid) quantities, a formal survey will not be required if Contractor and Division/Engineer can agree on the limits to be measured in which case Engineer can then compute acreage using computer software. In the event Contractor disputes either the limits used or the subsequent measurement for payment, a formal survey of these two (2) bid items will then be required of Contractor at its expense.

SECTION 02100 - MOBILIZATION, SITE CLEARING & PREPARATION

1.2 QUALITY ASSURANCE

D. The following address can be utilized as a reference for Indiana Bat guidelines.

http://www.fws.gov/midwest/endangered/mammals/inba/index.html

3.2 PROTECTION

A. Change "…the utility provider and Engineer at to cost to Division." to: "…the utility provider and Engineer at no cost to Division."

G. Access across, and work within, the "Pipeline Work Zone" shown on the Plans is required in this Contract. When Contractor wishes to enter this zone for any reason, Contractor shall abide by all requirements of Kinder Morgan Inc. and Natural Gas Pipeline Company. Requirements include, but are not limited to, pre-notification; providing and maintaining cover over high pressure (700 psi) gas lines; keeping pipeline personnel abreast of Contractor's schedule throughout the Contract period, as well as of Contractor's specific times to accomplish work within the pipeline work zone; etc.

SECTION 02110 - IMPOUNDMENTS

1.5 SUBMITTALS

D. As no neutralization of acid water is expected to be required in this contract, no submittals are needed.

3.4 NEUTRALIZATION AND DEWATERING PLANNING MEETING

H. As no neutralization of acid water is expected to be required in this contract, and as dewatering of the ponds to be filled appears to be straightforward, a formal plan will not be necessary. Instead, Contractor and Engineer shall, prior to discharging any pond, discuss Contractor's approach in the field. Dewatering of any pond may not, however, proceed until 1) Engineer verifies that the pH of the water is acceptable, and 2) either Engineer accepts Contractor's approach, or Contractor agrees to discharge in another manner acceptable to Engineer.

3.7 TREATMENT AND DISCHARGE SUMMARY

A. The table that presents data from samples taken is included on Drawing 16 of the Plans.

3.8 MEASUREMENT AND PAYMENT

B. *Impoundment Discharge:* The approximate volumes of all ponds to be discharged are shown on Drawing 16. For actual payout of Impoundment Discharge, any pond completely discharged will be eligible for partial payment of the lump sum amount in the same proportion its listed volume bears to the total estimated volume of all ponds requiring discharge in this contract. A pond which is only partially dewatered is not, however, eligible for payment.

SECTION 02120 - SEDIMENT AND EROSION CONTROL

2.1 MATERIALS

I. Turf Reinforcing Mats shall be Type 3.

K. Hay Bale Barriers

1. Use small, rectangular bales, seventy-five (75) pounds or heavier. Posts for anchoring bales shall be steel fence posts, minimum five (5) feet long; soil (anchor) plates are not required. Other methods of anchoring the bales may be proposed by Contractor for Division/Engineer's consideration and approval.

L. Granular Surfacing

1. Granular Surfacing material shall be crushed limestone. Various gradations are included depending on site conditions, intended purpose, etc. Graded stone or clean stone may be needed, and top size may range from as small as three-quarter (3/4) inch to as large as three (3) inches; however, all shall be measured and paid for as granular surfacing. Prior to ordering stone, Contractor and Engineer shall select the appropriate gradation. Limestone rock quality and gradations shall meet the following, as applicable:

IDOT Section 4120, Granular Surface, Gradation 10 or 11 as selected
IDOT Section 4121, Granular Subbase, Gradation 12a
IDOT Section 4122, Base Material, Gradation 13

3.3 INSTALLATION OF SEDIMENT AND EROSION CONTROL MEASURES

N. Hay Bale Barriers

1. Excavate a four (4) inch deep trench. Place bales in trench butted tightly together.

2. Tamp soil in place around the perimeter of the barrier.

3. Secure each bale with two (2) steel fence posts driven through each bale into the ground.

O. Granular Surfacing

1. Install granular surfacing material as shown on the plans or as directed by the Engineer.

2. Regrade or replace granular surfacing material once the voids become plugged with mud or as directed by the Engineer.

3. Remove and dispose of installed and existing granular surfacing material as directed by the Engineer.

3.4 MEASUREMENT AND PAYMENT

O. *Hay Bale Barriers:* Hay bale barriers will be paid for at the contract unit price per lineal foot of hay bale barrier measured jointly by Contractor and Engineer. Seventy percent (70%) of the bid unit price shall be paid at time of installation, and thirty percent (30%) of the bid unit price shall be paid at time of removal. Incidentals to the bid unit price shall be similar to those for silt fence installation and removal.

P. *Granular Surfacing:* The unit price shall include all materials and work required for installation of the granular surfacing material in conformance with these Construction Specifications and the Plans, including furnishing and placing the stone. Measurement for payment shall be based on the tonnage of granular surfacing material actually installed as determined from weight tickets, rounded to the nearest one-hundredth (0.01) ton. Only material placed in accordance with the Plans and these Specifications shall be measured and paid.

SECTION 02200 – EARTHWORK, ROUGH GRADING

3.14 MEASUREMENT AND PAYMENT

D. *Strip, Stockpile, Respread:* Stripping, stockpiling and respreading topsoil shall be measured and paid for at the contract unit rate for same. Fifty percent (50%) of the bid unit price shall be paid after the material is stockpiled and temporarily seeded (temporary seeding measured and paid separately), and the remaining fifty percent (50%) of the bid unit price after the material has been respread.

E. *Outlet Control Barriers:* The unit price per cubic yard shall be full compensation for shaping barriers and for additional compactive effort required. Turf mat is measured and paid separately.

SECTION 02300 - DRAINAGE SYSTEMS, GENERAL

2.2 PIPE

A. Corrugated Polyethylene

1. Pipe for tiling shall be non-perforated corrugated polyethylene (PE) pipe and fittings, with sizes as shown on the Plans and installations per manufacturer's recommendations. The last twenty (20) feet of each main line which daylights shall be solid polyvinylchloride (PVC) pipe, Schedule 40. The PVC pipe shall be furnished with no more than one (1) joint, i.e. maximum two (2) sections of pipe. Where outlet tees are required (see Table, Drawing 16), they shall be PVC, Schedule 40, size to match the outlet pipe diameter.

2. All pipe for tiling shall be joined using soil-tight couplers with zip ties. To strengthen joints, poly splicing tape may be used in addition to, but not in lieu of, zip ties. For laterals to terrace intakes (risers), wyes (not tees) shall be used on the main lines. Laterals shall not exceed five (5) feet in length from main line wye to intake tee. Main line reducers, where required, shall be located **upstream** of wyes.

3. Material specification for tiling depends on installation methods and equipment. Only two options are hereby approved:

   a. **Dual-Wall Pipe for Trench Installation with Backhoe or Excavator:** Use twenty (20)-foot lengths of Prinsco Goldflo (dual-wall) pipe and fittings, or approved equal. PVC Schedule 40 pipe and fittings is an acceptable alternate for main line tiling throughout. For laterals to terrace intakes, if the length of the lateral is five (5) feet or less, Contractor may use Prinsco Goldline (single wall) pipe; otherwise, dual-wall pipe will also be required for laterals.

   b. **Single-Wall Pipe for U-Ditch Installation with Tiling Machine:** For main lines and laterals, use coils of Prinsco Goldline (single-wall) pipe and fittings, or approved equal. Note that the use of single-wall pipe for main line tiling is only approved if the excavation for the tiling is accomplished with a dedicated tiling machine, and then only if the tiling machine creates a semi-circular (U-shaped) trench bottom.

B. High Density Polyethylene Pipe (HDPE)

2. Concrete for backfill of the last fifteen (15) feet of HDPE pipe adjacent to the concrete riser (see Detail 3/15 and Detail 1/16) shall be incidental to the bid price for each concrete riser.

D. Reinforced Concrete Pipe (RCP)

2. Pipe for concrete risers, Arch RCP and flared end sections shall be Class 3 (2000D Load). All pipe sections, except for concrete risers, shall be predrilled for tied joints.

3.11 MEASUREMENT AND PAYMENT

E. *Concrete Riser:* Concrete for backfill of the adjacent fifteen (15) feet of HDPE outlet pipe (see Detail 3/15 and Detail 1/16) shall be included in the bid price for each concrete riser.

F. *Tiling:* Main line tiling shall be measured for payment from the daylight end of the PVC pipe, to the stepdown point of the first reducer, and from reducer to reducer thereafter until the upper blind end of the main line is reached, all PE fittings and PVC pipe being included in the main line measured length, but otherwise incidental to the bid price per lineal foot of tiling. Laterals to terrace intakes shall be incidental to terrace risers *(Bid Items 18-20)*.

I. *Terraces:* Payment for detention (fill) terraces excludes earthwork which is already paid for under Bid Item 13, Excavation; payment for diversion (cut/fill) terraces includes the nominal amount of cut required to construct the terrace. Payment for terraces is meant to compensate Contractor for additional staking and work necessary

to shape the terraces. Terraces are measured along their ridge line and as such include end returns at all detention terrace high points (see Table, Drawing 17).

SECTION 02400 - SUBGRADE PREPARATION. WITHOUT COVER MATERIAL

2.4 WETLAND COMPOST

A. Wetland compost shall be cow or horse manure, well composted. Contractor shall be responsible for locating adequate source(s) of composted manure, whether commercially processed, from area farms, or from other sources.

B. In the event that acceptable composted manure of sufficient quantity is not available, Contractor shall substitute with peat or well composted yard waste. If a substitution is necessary, Contractor shall submit a representative sample of the proposed material to Engineer and obtain approval from Division/Engineer prior to making the substitution.

3.3 LIME-MULCH APPLICATION

A. Application Rates

1. Contractor shall apply lime at the rate of twenty (20) tons ECCE/acre for bidding purposes. Actual application rate may vary depending on the recommendation of the soil tests. Ag lime will not be allowed to be stockpiled on site.

2. Contractor shall apply mulch at the rate of three (3) tons/acre.

3.4 WETLAND AREAS

C. Wetland Compost

1. Composted manure shall be applied evenly at the rate of twenty-four (24) dry tons per acre over areas requiring wetland seeding.

2. Thoroughly incorporate manure into the upper six (6) inches of earthwork. Incorporation should be done immediately following completion of grading activities in wetland areas when conditions are dry after lime/mulch incorporation specified in this Section of the Specifications is complete.

3.5 MEASUREMENT AND PAYMENT

C. Wetland Fertilizer shall not be measured or paid for in this Section. It shall be measured and paid for in Section 02700, Seeding, as part of the fertilizer used in permanent seeding. The same application rates shall apply.

E. Wetland Compost shall be measured and paid for by the dry ton, applied at the rate of twenty-four (24) dry tons to the acre, and incorporated. Although Division/Engineer will base acceptance of the compost on visual examination of the compost prior to unloading, weight tickets are nevertheless required for payment.

SECTION 02500 - FENCING

3.1 PERFORMANCE

H. Change “IDOT Standard Road Plan RC-8” to “IDOT Standard Road Plan MI-103.”

SECTION 02700 - SEEDING

2.4 SEED

D. The following permanent seed mixes shall be used:

1. Site Mix

Common Name	Scientific Name	Rate (PLS/acre)
Orchardgrass	Dactylis glomerata	10
Timothy	Phleum pratense	8
Redtop	Agrostis alba	8
Birdsfoot Trefoil	Lotus corniculatus	8
Alfalfa	Medicago sativa	3
Alsike Clover	Trifolium hybridum	2
Purple Prairie Clover	Petalostemon purpureum	3
Virginia Wild Rye	Elymus virginicus	4
Big Bluestem	Andropogon gerardi	5
Little Bluestem	Schizachyrium scoparius	4
Indiangrass	Sorghastrum nutans	5
Fall Cover		
Winter Wheat	Triticum aestivum	60
Spring Cover		
Oats	Avena sativa	30

2. Wetland Mix

Common Name	Scientific Name	Rate (PLS/acre)
Canada Vetch	Astragalus canadensis	4
Canada Wild Rye	Elymus canadensis	5
Big Bluestem	Andropogon gerardi	8
Prairie Cordgrass	Spartina pectinata	1
Tartary Buckwheat	Fagopyrum esculentum	5
Sedges	Carex sp. (2 or more)	3
Spike Rush	Eleocharis v. erythropodo or v. palustris	3
Purple Prairie Clover	Petalostemon purpureum	0.5
Red Clover	Trifolium pratense	4
Fall Cover		
Winter Wheat	Triticum aestivum	60
Spring Cover		
Oats	Avena sativa	30

3.5 LIMING AND FERTILIZING

C. For bidding purposes, assume the application rate of agricultural limestone is five (5) tons ECCE/acre.

D. For bidding purposes, assume the application rate of Nitrogen is one hundred (100) pounds per acre, Phosphorus is forty (40) pounds per acre, and Potassium is eighty (80) pounds per acre.

END SUPPLEMENTAL SPECIFICATIONS

APPENDICES

APPENDIX A

FIELD INVESTIGATIONS

Data Summaries

1. Soils Analyses – Fertility
2. Soils Analyses – Geotechnical

MIKON CORPORATION
Consulting Engineers
816.364.2890
816.364.2126 fax
4414 B South 40th Street
St. Joseph, MO 64503
mikon@mikoncorp.com

GOFF RECLAMATION PROJECT
MARION COUNTY, IOWA

SOILS ANALYSES - GEOTECHNICAL
SUMMARY - LABORATORY TEST RESULTS

SAMPLE NUMBER	SAMPLE DATE	PRIMARY DESCRIPTION	MOISTURE CONTENT	USCS CLASSIFICATION	ATTERBERG LIMITS			GRADATION (% Passing)		
					LL	PL	PI	#4	#40	#200
1 NW	07/27/06	Medium brown/light brown clayey silt with highly weathered shale	21.5	ML	37	31	6	91	79	61
2 SW	07/27/06	Medium brown clayey silt with highly weathered shale	16.2	ML	38	28	10	93	82	66
3 SE	07/27/06	Medium brown clayey silt with highly weathered shale and gravel	15.5	ML	37	28	9	91	74	64
4 NE	07/27/06	Yellow brown clayey silt with highly weathered shale and trace gravel	20.3	ML	37	28	9	95	87	77
5 NE	07/27/06	Brown clayey silt with highly weathered shale	16.0	ML	34	24	10	92	77	64
6 NE	07/27/06	Medium brown clayey silt with highly weathered shale	20.1	ML	35	27	8	88	69	59

MIKON CORPORATION
Consulting Engineers
816.364.2890
816.364.2126 fax
4414 B South 40th Street
St. Joseph, MO 64503
mikon@mikoncorp.com

GOFF RECLAMATION PROJECT
MARION COUNTY, IOWA

SOILS ANALYSES - FERTILITY
SUMMARY - LABORATORY TEST RESULTS

SAMPLE NUMBER	ORGANIC MATTER (%)	PHOSPHORUS (ppm) **	POTASSIUM (ppm)	CALCIUM (ppm)	MAGNESIUM (ppm)	ACIDITY (pH)	CEC	LIME NEEDS *** (as 100% ECCE) (lb/ac)	
								pH 6.0	pH 6.5
1 NW	7.5	3	16	2,100	1,170	3.0	54.1	0	23,900
2 SW	3.2	3	31	1,200	840	2.9	46.0	0	23,100
3 SE	2.0	16	50	400	190	3.5	23.7	0	13,700
4 NE	1.3	7	51	600	640	5.1	11.4	0	1,350
5 NE	1.9	9	38	800	390	3.5	29.3	0	15,100
6 NE	3.2	3	38	1,300	130	3.3	30.7	0	15,900

NOTES
** Phosphorus by Bray 1
*** Lime needs are in pounds per acre for 6" plow depth
ppm = parts per million
Samples obtained 07/27/06

APPENDIX B

STANDARD DRAWINGS

1. Silt Fence
   IDOT Standard Road Plan EC-201 (3 sheets)

2. Field Fence Construction
   IDOT Standard Road Plan MI-103 (5 sheets)

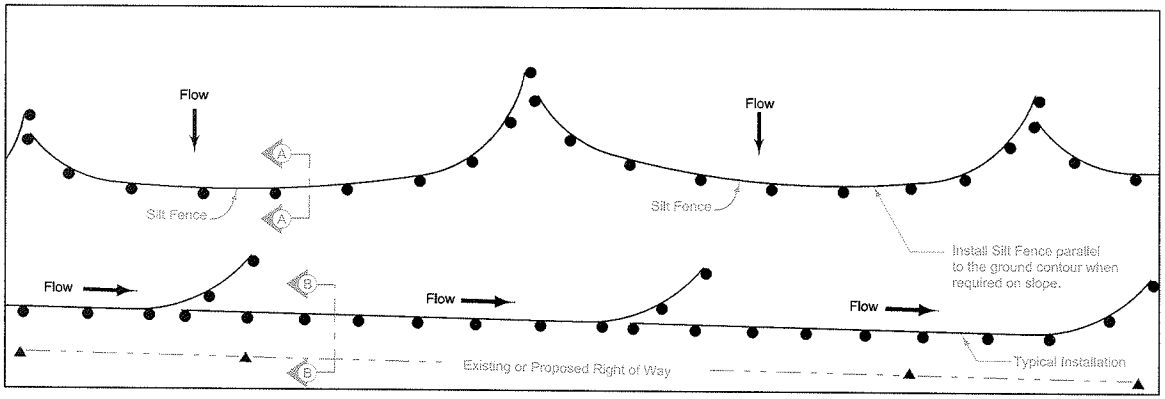

PLAN FOR SILT FENCE

Install all silt fence using a silt fence machine. Use manual (trench) installation if phyical conditions prohibit machine installation.

For machine installation, compact by driving over each side of silt fence at least two times with device exerting 60 p.s.i. or greater.

For manual installation, compact with a mechanical or pneumatic tamper.

Place silt fence continuously up to a maximum length of 200 feet. For every segment of silt fence that is placed, flare up the slope the last 20 feet of the segment to contain runoff as shown.

1. Secure top of engineering fabric to steel posts using cable ties (50 lb.) or wire. See back view attachment to post.
2. For manual installation only, fold engineering fabric along bottom of trench.
3. Embed all posts 28 inches below the ground line.

SILT FENCE - MACHINE AND MANUAL INSTALLATION

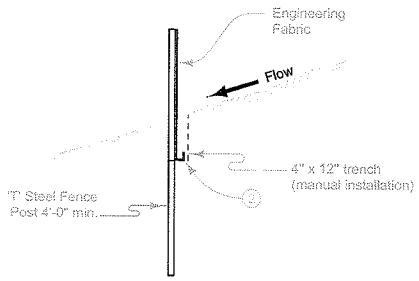

SECTION A-A

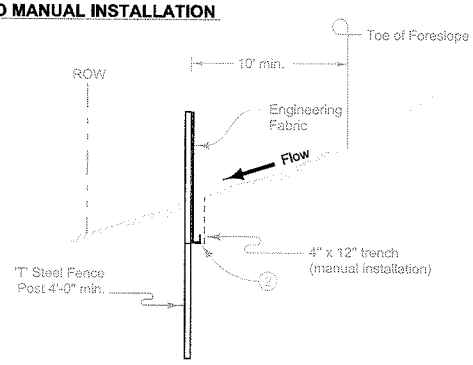

SECTION B-B

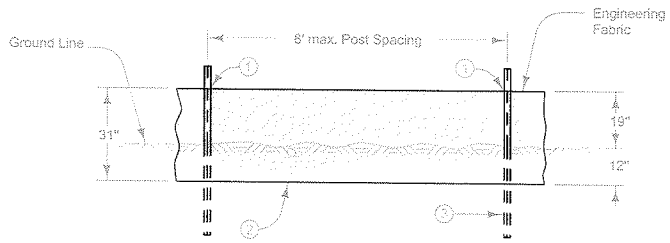

FRONT VIEW

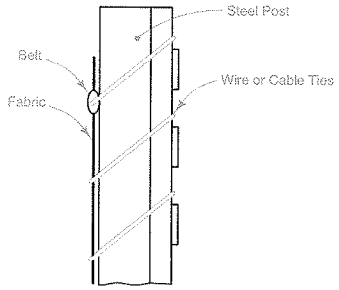

PROFILE VIEW
ATTACHMENT TO POST

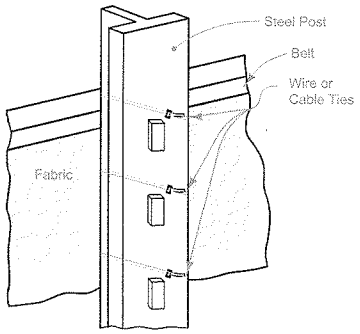

BACK VIEW
ATTACHMENT TO POST

Contour Lines

Possible Contract Items:
- Silt Fence
- Silt Fence for Ditch Checks

Possible Tabulations:
- 100-17
- 100-18

Iowa Department of Transportation

STANDARD ROAD PLAN

REVISION	
New	04-20-10

EC-201

SHEET 1 of 3

REVISIONS: New. Replaces RC-17.

Deanna Maifield
APPROVED BY DESIGN METHODS ENGINEER

SILT FENCE

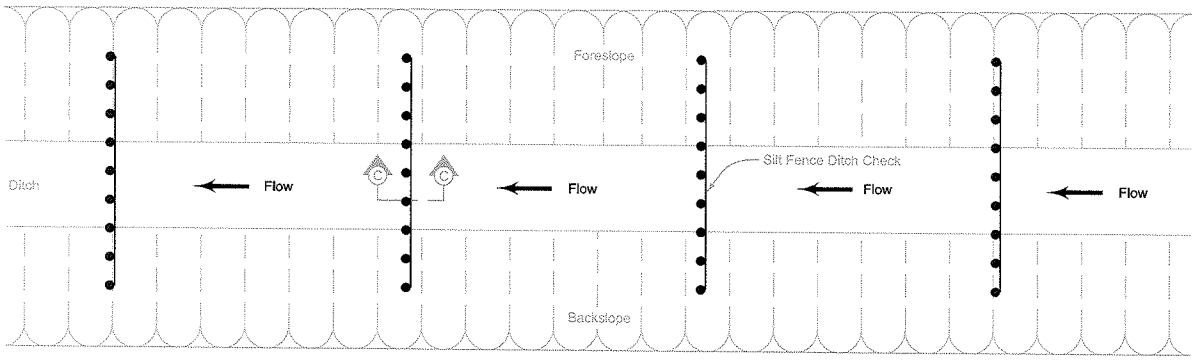

PLAN FOR DITCH CHECK

1. Secure top of engineering fabric to steel posts using cable ties (50 lb.) or wire. See attachment to post.
2. For manual installation only, fold engineering fabric along bottom of trench.
3. Embed all posts 28 inches below the ground line.
4. Locate posts at toe of foreslope and toe of backslope and space remaining posts equally.
5. The minimum end span of ditch check from the toe of slope will be according to the following table:

Foreslope or Backslope	Width
6:1	12'
6:1/3.5:1	10'
6:1/3:1	9'
3.5:1	7'
3:1	6'

DITCH CHECK - MACHINE INSTALLATION

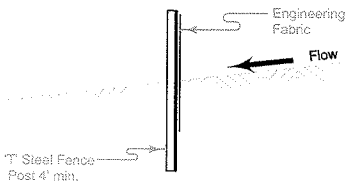

SECTION C-C

DITCH CHECK - MANUAL INSTALLATION

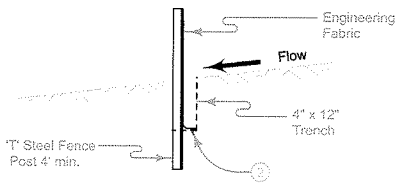

SECTION C-C

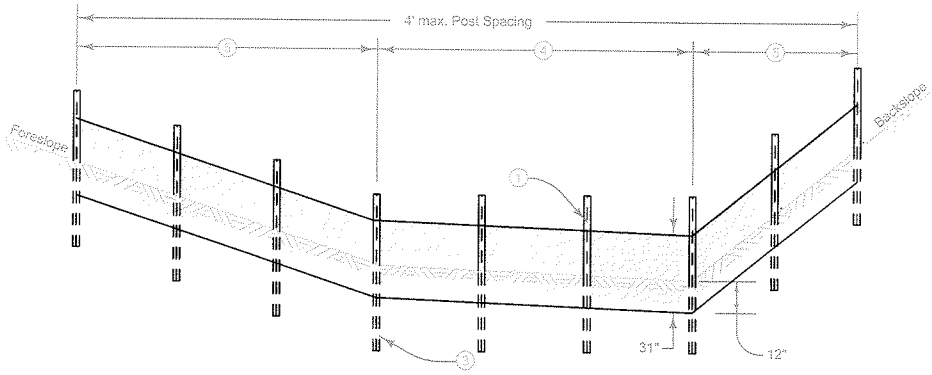

FRONT VIEW

Iowa Department of Transportation

STANDARD ROAD PLAN

REVISION	
New	04-20-10

EC-201

SHEET 2 of 3

REVISIONS: New. Replaces RC-17.

Deanna Maifield
APPROVED BY DESIGN METHODS ENGINEER

SILT FENCE

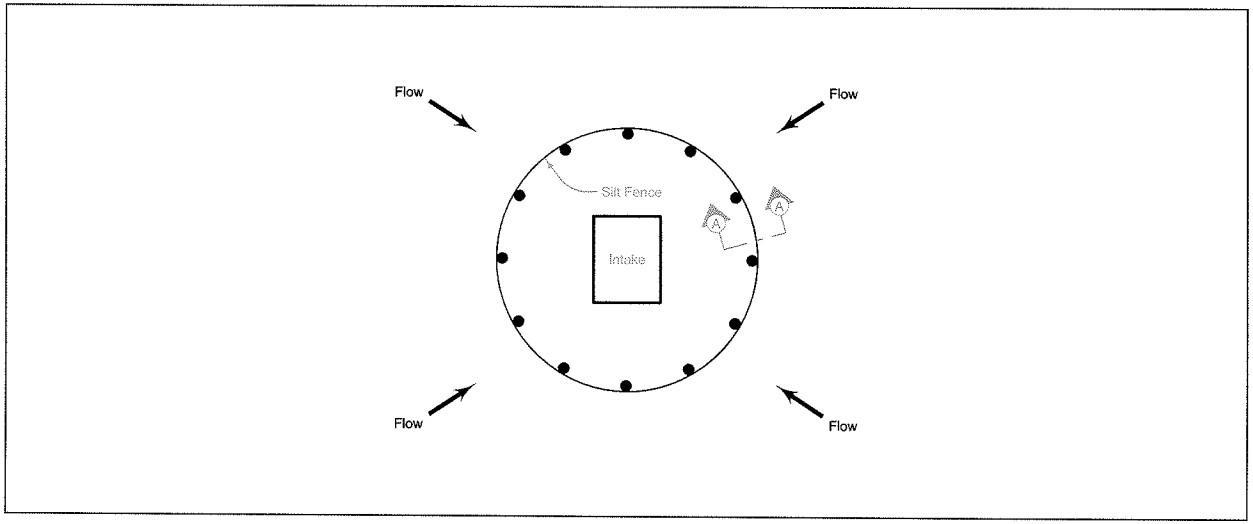

PLAN FOR SILT FENCE AT INTAKE

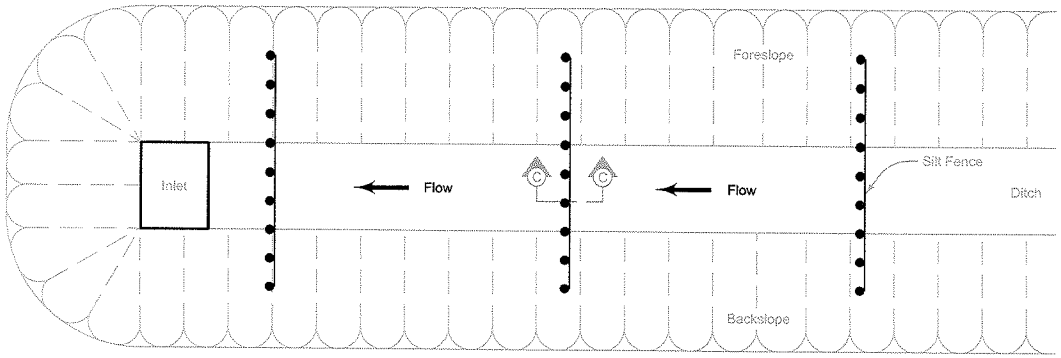

Contour Lines

PLAN FOR SILT FENCE DITCH CHECK AT INLET

Iowa Department of Transportation

STANDARD ROAD PLAN

REVISION	
New	04-20-10

EC-201

SHEET 3 of 3

REVISIONS: New. Replaces RC-17.

Deanna Maifield

APPROVED BY DESIGN METHODS ENGINEER

SILT FENCE

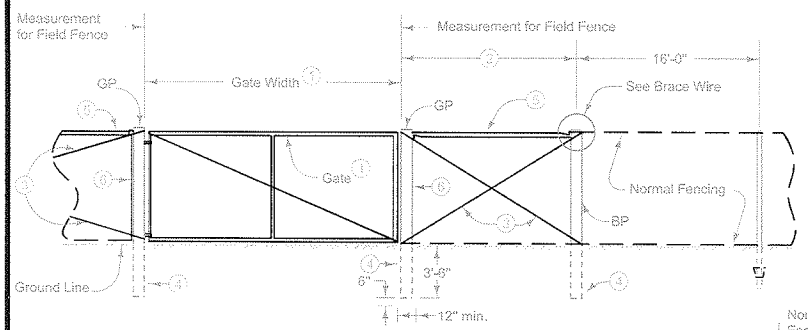

GATE ASSEMBLY

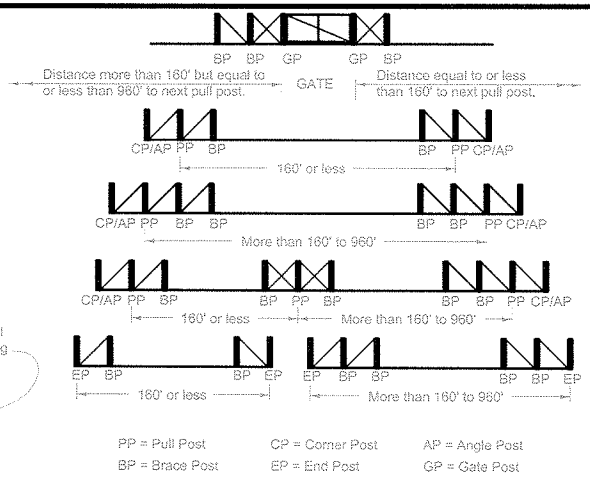

BRACE PANEL LAYOUT

1. Unless specified otherwise, install a 16 foot gate. Double gate is required only for widths more than 16 feet. Exact details of gate design are subject to the approval of the Engineer. Install as recommended by the manufacturer.
2. Brace Panel.
3. Brace Wire: 4 strands of No. 9 wire.
4. Details indicate placement of granular material for certain posts. The Contractor has the option to drive posts if method demonstrated is satisfactory to the Engineer. Granular material will not be required for driven posts.
5. Metal brace 8 feet long.
6. Wrap wire fabric around post.
7. Pull Post Assembly is requried when the distance between pull posts is greater than 960 feet in straight lines of fence.

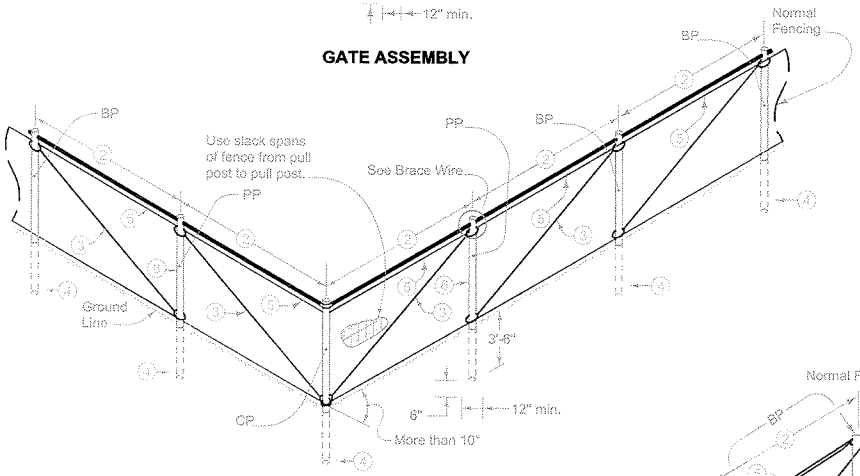

CORNER POST ASSEMBLY

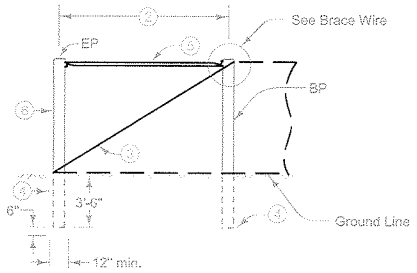

END POST ASSEMBLY

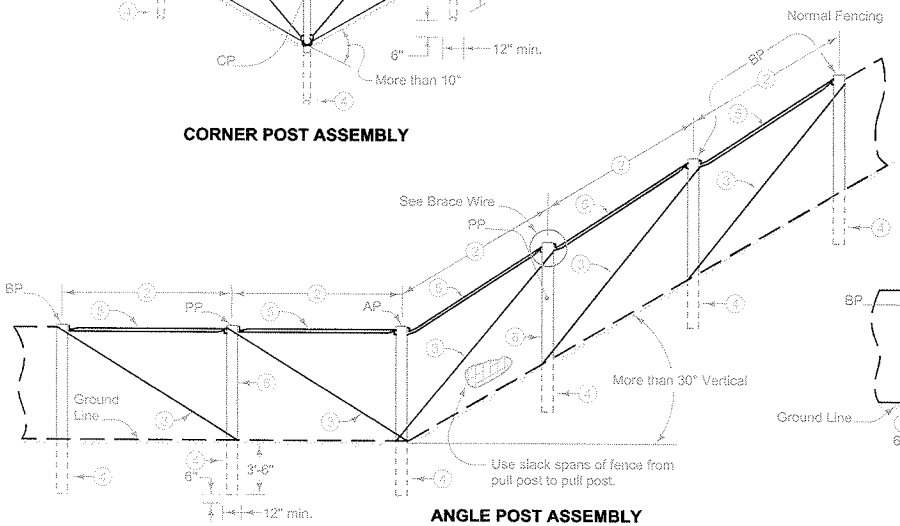

ANGLE POST ASSEMBLY

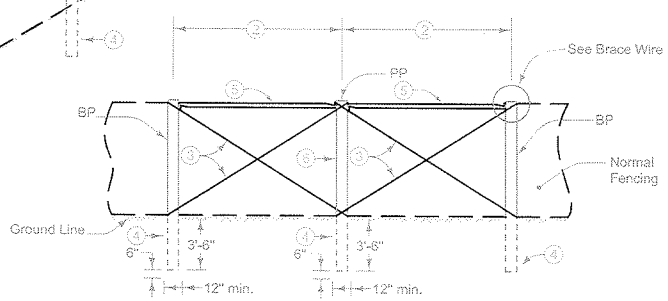

PULL POST ASSEMBLY

FIELD FENCE ASSEMBLY

Possible Contract Items:
- Field Fence
- Field Fence Brace Panel
- Field Fence Gate
- Flood Plain Fencing
- Type A Channel Crossing Fence
- Type B Channel Crossing Fence

Possible Tabulations:
- 100-7

Iowa Department of Transportation

STANDARD ROAD PLAN

REVISION	
New	04-20-10

MI-103

SHEET 1 of 5

REVISIONS: New. Replaces RC-8A, RC-8B, RC-9A, RC-9B.

Deanna Maifield
APPROVED BY DESIGN METHODS ENGINEER

FIELD FENCE CONSTRUCTION

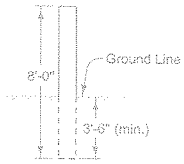

ANGLE, BRACE, CORNER, END OR PULL POST (WOD)

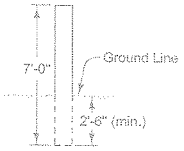

LINE POST (WOOD)

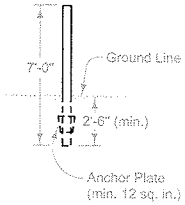

LINE POST (STEEL)

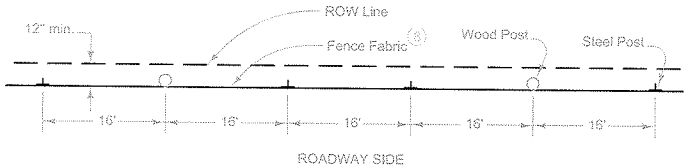

PLAN

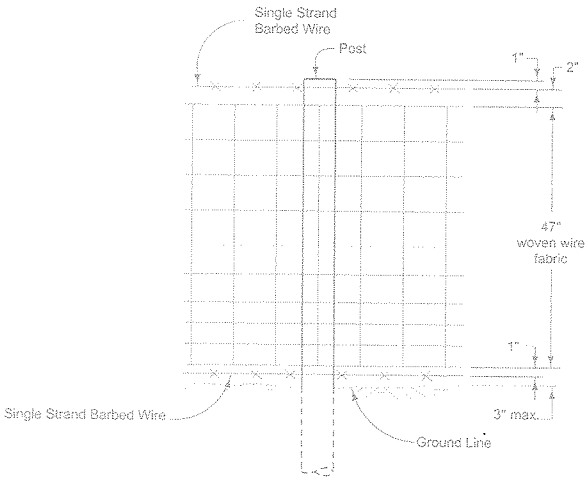

ELEVATION

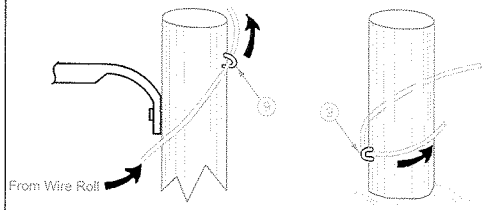

STEP 1 STEP 2

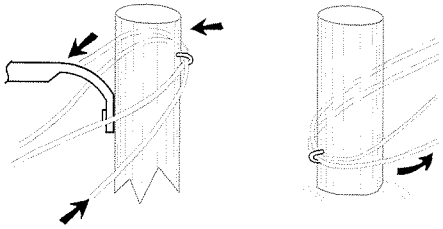

STEP 3 STEP 4

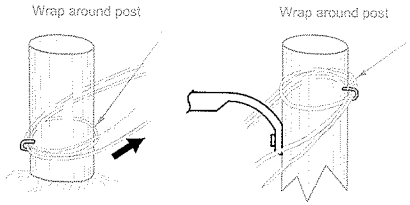

STEP 5 STEP 6

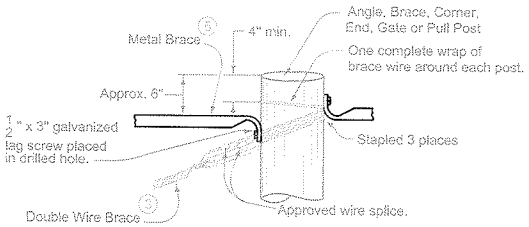

BRACE WIRE INSTALLATION (10)

FIELD FENCE ASSEMBLY

(3) Brace Wire: 4 strands of No. 9 wire.

(5) Metal brace 8 feet long.

(9) Place fence fabric on the roadway side of posts. Place fence fabric on the opposite side of posts for certain curves, stream crossings, or other locations directed by the Engineer or by the contract documents.

(9) Set staples cross-wise to the grain. Drive staples tight at pull posts. Drive all other staples firm, but loose enough to allow lateral movement of the wire.

(10) Twist the two brace wires together to produce proper tension in the brace assembly.

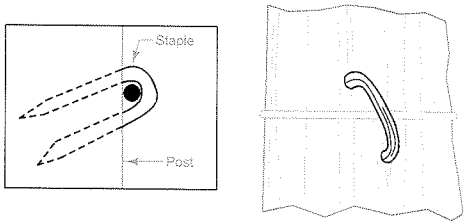

STAPLES (9)

Iowa Department of Transportation

STANDARD ROAD PLAN

REVISION	
New	04-20-10

MI-103

SHEET 2 of 5

REVISIONS: New. Replaces RC-8A, RC-8B, RC-9A, RC-9B.

Deanna Maifield
APPROVED BY DESIGN METHODS ENGINEER

FIELD FENCE CONSTRUCTION

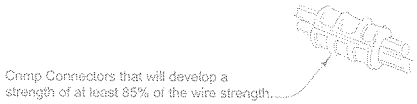

CRIMP CONNECTION

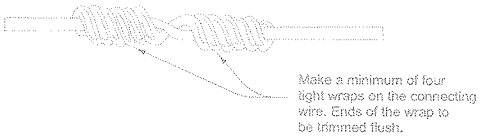

IN-LINE CONNECTION

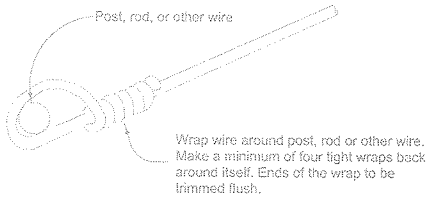

SELF-WRAP CONNECTION

APPROVED WIRE CONNECTIONS

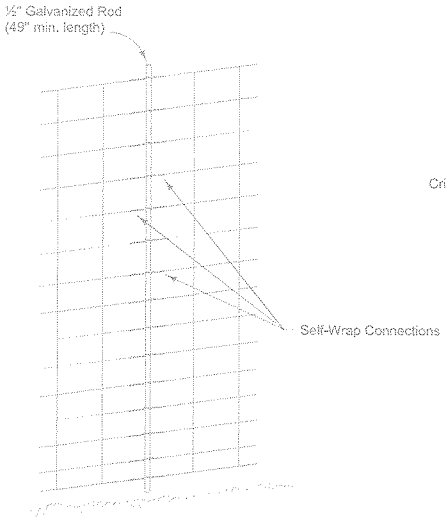

SPLICE WITH ROD

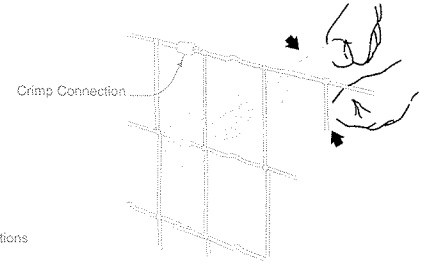

CRIMP SPLICE

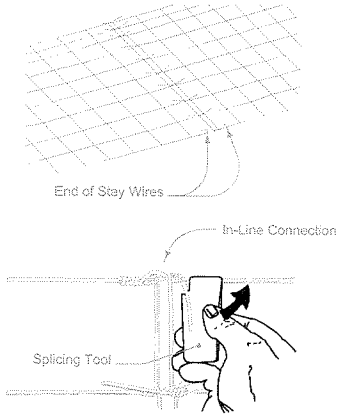

OVERLAP SPLICE

FABRIC SPLICES

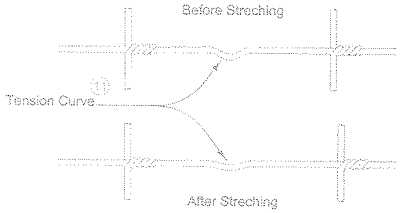

STRETCHING DETAILS

BRACE WIRE SPLICE (12)

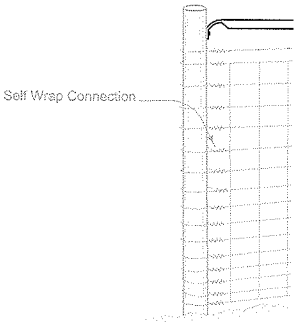

END POST CONNECTION

FIELD FENCE ASSEMBLY

(11) Tension curve consists of a "U" shaped crimp in the fence wires and has the same effect as a spring. Stretch to 50% removal of the factory crimp.

(12) Crimp connection and in-line connection are also acceptable brace wire splices.

Iowa Department of Transportation

STANDARD ROAD PLAN

REVISION	
New	04-20-10

MI-103

SHEET 3 of 5

REVISIONS: New. Replaces RC-8A, RC-8B, RC-9A, RC-9B.

Deanna Maifield

APPROVED BY DESIGN METHODS ENGINEER

FIELD FENCE CONSTRUCTION

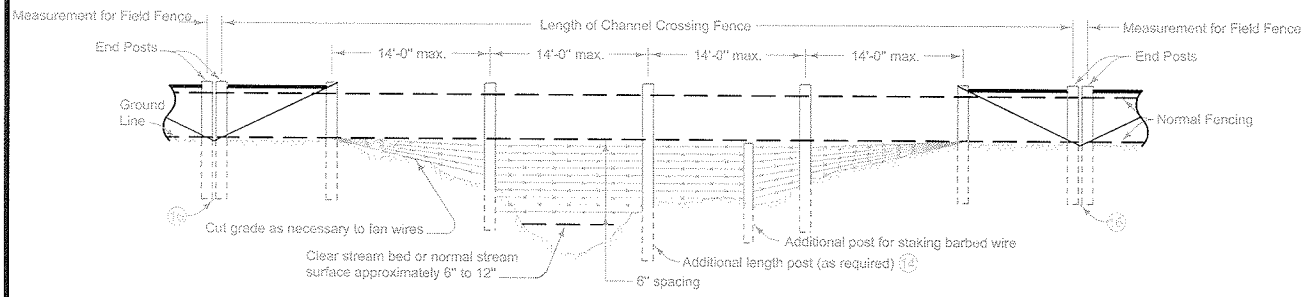

CHANNEL CROSSING FENCE - TYPE "A"

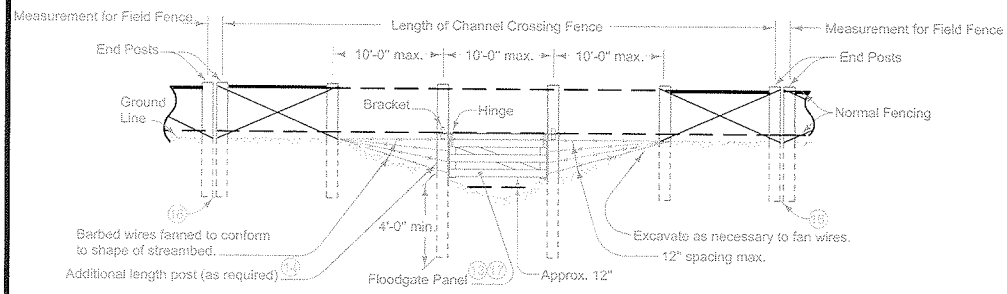

CHANNEL CROSSING FENCE - TYPE "B"

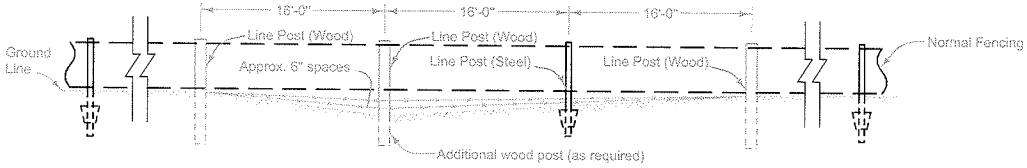

LINE FENCE AT MINOR GROUND DEPRESSIONS 16

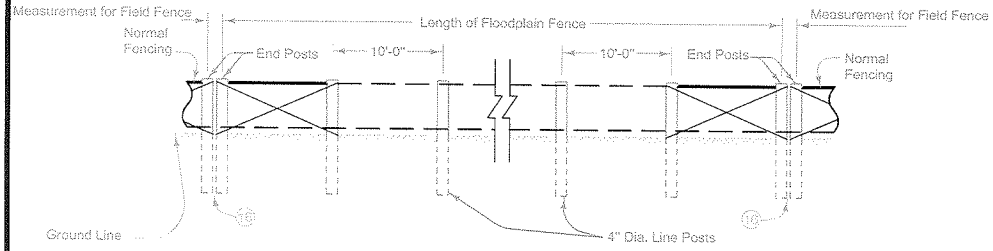

FLOOD PLAIN FENCE

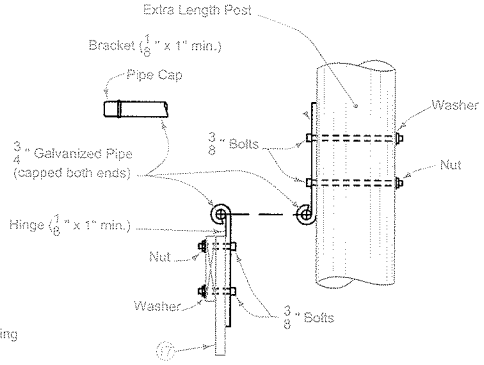

FLOODGATE HINGE AND BRACKET

FIELD FENCE AT WATERWAYS

13 Floodgate is part of the Type 'B' Channel Crossing Fence.

14 All extra length posts more than 8 feet long require a minimum embedment of 4 feet. For Flood Plain Fencing, install line posts of treated wood, 4 inches minimum diameter, 8 feet long and spaced at 10 foot centers. Maximum interval of Pull Posts Assembly is 600 feet.

15 For fence at minor ground depressions, additional wood line posts and up to two additional barbed wires will not be paid for directly but will be considered incidental to the price bid for Field Fence.

16 Provide a minimum of 12 to 15 inches of clear space between adjoining end post installations.

17 Floodgate Panel built from Untreated Rough 1 in. x 8 in. (Nominal) Lumber. More than one Floodgate Panel if required by the contract documents.

Iowa Department of Transportation

STANDARD ROAD PLAN

REVISION	
New	04-20-10

MI-103

SHEET 4 of 5

REVISIONS: New. Replaces RC-8A, RC-8B, RC-9A, RC-9B.

Deanna Maifeld
APPROVED BY DESIGN METHODS ENGINEER

FIELD FENCE CONSTRUCTION

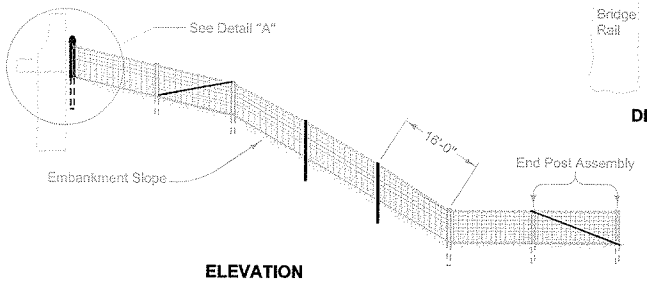

ELEVATION

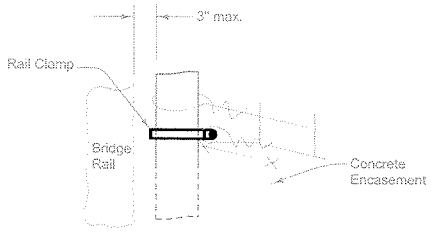

DETAIL "B"

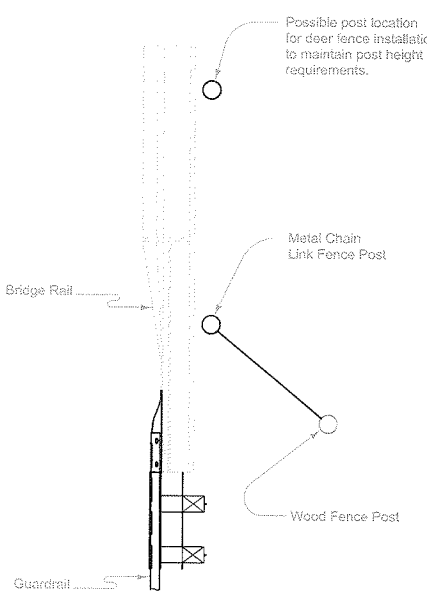

PLAN

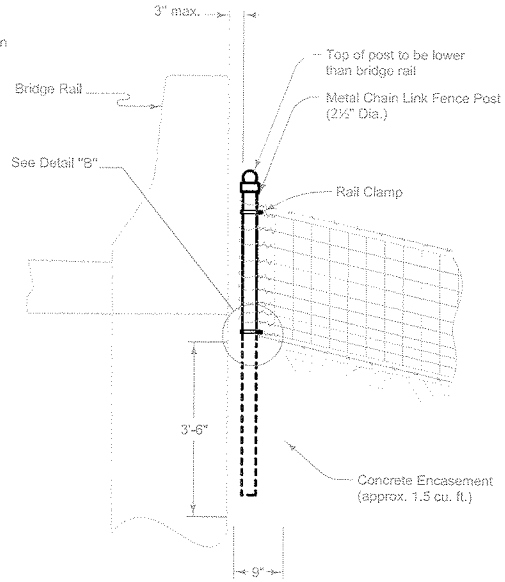

DETAIL "A"

FENCE TERMINATION AT BRIDGES (13)

(13) Fence termination at bridges, culverts, and other structures as detailed hereon will not be paid for separately but will be considered incidental to the bid item "Field Fence" or "Deer Fence."

(14) Place minimum of four (4) barbed wires fan shaped, connected to eye bolt on culvert wall or set 4 inch post when necessary.

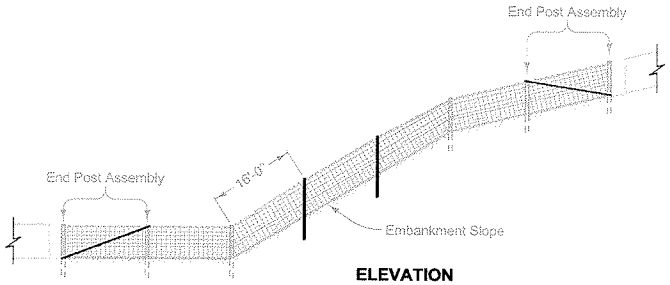

ELEVATION

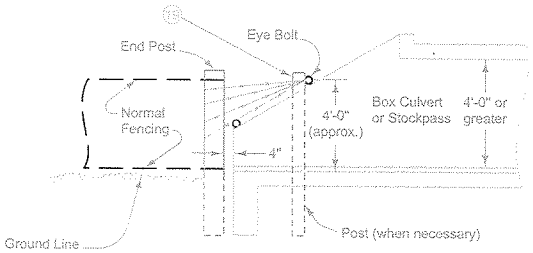

BOX CULVERTS OR STOCK PASSES 4 FEET OR LARGER

FENCE TERMINATION AT STRUCTURES (14)

Iowa Department of Transportation

STANDARD ROAD PLAN

REVISION	
New	04-20-10

MI-103

SHEET 5 of 5

REVISIONS: New. Replaces RC-8A, RC-8B, RC-9A, RC-9B.

Deanna Maifield

APPROVED BY DESIGN METHODS ENGINEER

FIELD FENCE CONSTRUCTION

PLANS

(Separate Bound Set)